CTU SERIES

寶獅牌工業用縫紉機 INDUSTRIAL SEWING MACHINE

MODEL

CTU9011
&
UTB03F
UTC03F
UTG03F
UTH03F
STB04
STC04
WPC03
WPG02

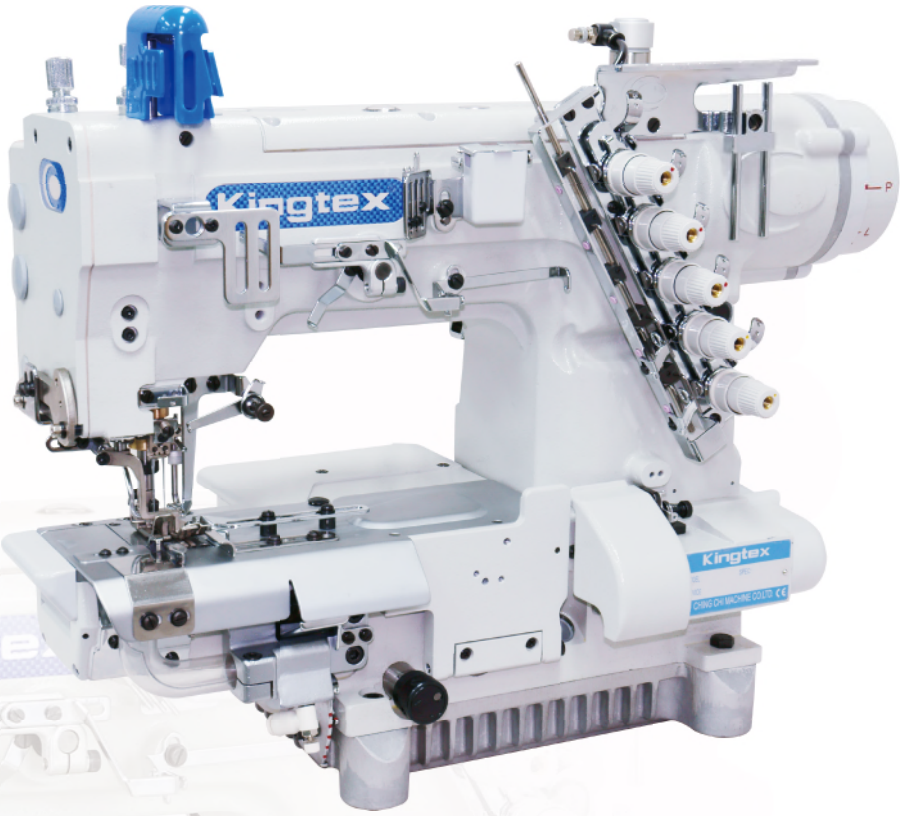

TOP FEEDING CYLINDER BED INTERLOCK MACHINE AND DEVICES / ATTACHMENTS

Parts List

精機機械廠股份有限公司 CHING CHI MACHINE CO., LTD
http://www.kingtexsewing.com.tw

Ver 1.1 2013.02
NO.CTD63O0-2K-12-06

1. CTU9011 本體與外裝零件 Frame Components For CTU9011 (一)

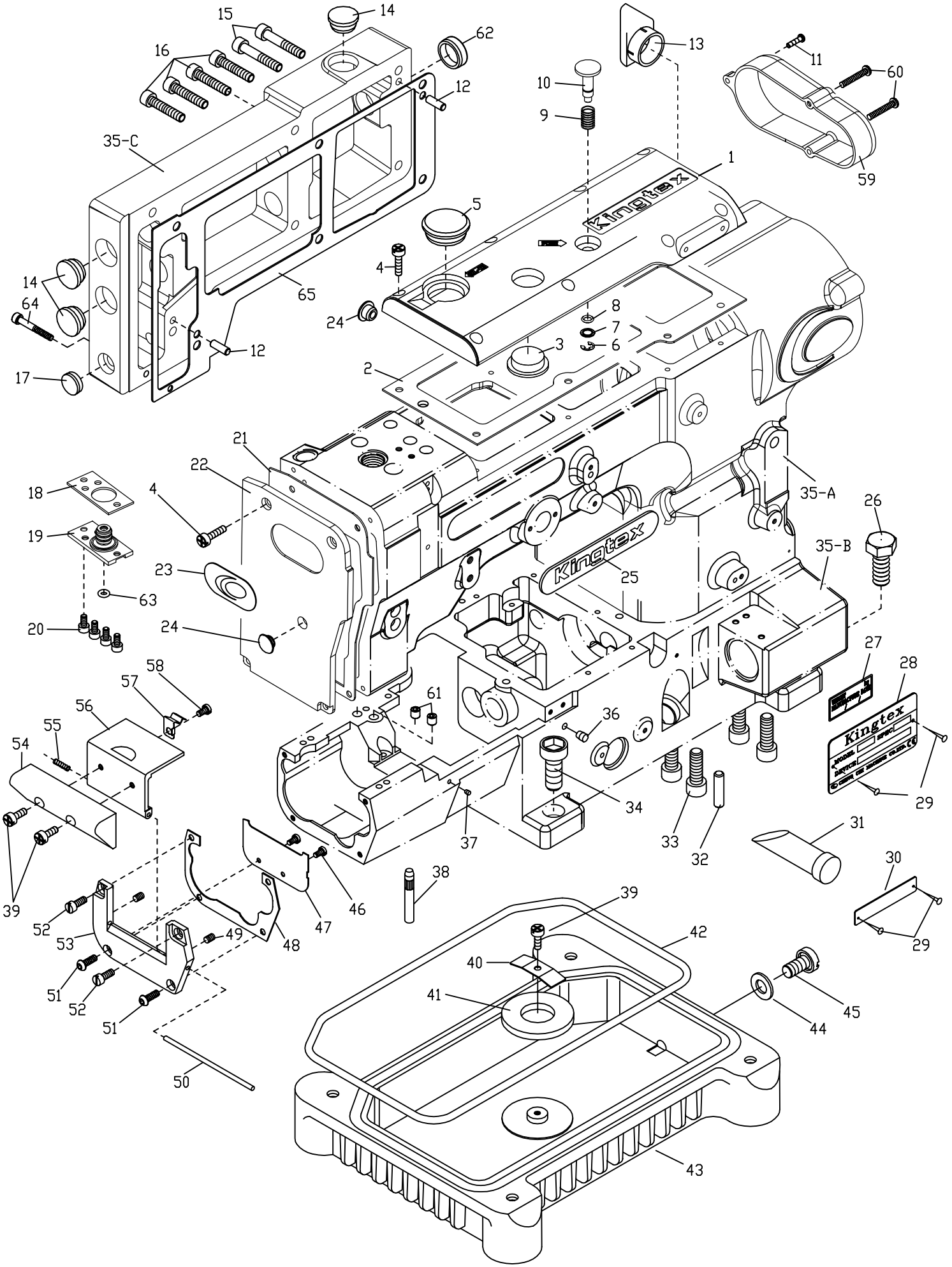

1. CTU9011 本體與外裝零件 Frame Components For CTU9011 (一)

序號 Ref.No.	物料編號 Parts No.	名稱 Description	單位用量 Amt .Req.
1	22441101011	上軸蓋 Top Cover	1
2	22400001032	油封 Gasket	1
3	2274110103	油鏡 Oil Window	1
4	8MC04281207D	螺絲 Screw (CT0102 M4-0.7*12)	12
5	22200002552	孔塞 Plug	1
6	90ER060	E形扣環 E-Ring	1
7	2130000357	墊圈 Washer	1
8	2130000362	O形油環 O Ring	1
9	2274110109	彈簧 Spring	1
10	22741101101	止動按鈕 Push Botton	1
11	8MC04281607D	螺絲 Screw (UH0177 M4-0.7*16)	1
12	4RP0010103	定位銷 Knock Pin	2
13	22400001131	導風管 Guid Pipe	1
14	23100001161	孔塞 Plug	3
15	8MM06403510B	螺絲 Serew (RP103-07 M6-1*35)	2
16	8MM06403010A	螺絲 Serew (NT67-01-17 M6-1*30)	4
17	22100004191	孔塞 Plug	1
18	2274110118	油封 Gasket	1
19	22741101193	封蓋 Oil Filter Cover	1
20	8MM04280807A	螺絲 Screw (MT0124 M4-0.7*8)	4
21	2274110121	油封 Gasket	1
22	2274110122	針棒蓋 Needle Cover	1
23	66488-1	銘鈑 Plate	1
24	22000001091	孔塞 Plug	2
25	66488-2	上車頭銘鈑 Model Plate	1
26	8MK08502013A	螺絲 Screw (C90140 M8-1.25*20)	1
27	66477-4	重量貼紙 Weight Paster	1
28	66485-1	車型銘板 Model Plate	1
29	66620	鉚釘 Rivet	4
30	66480-14	機器號碼牌 Machine No. Plate	1
31	2220000124	油面鏡 Oil Sign Gauge	1
32	2200000139	定位銷 Knock Pin	2
33	8MM10603016A	螺絲 Serew (CT0138 M10-1.5*30)	4
34	8MM08502013A	螺絲 Screw (CT0106 M8-1.25*20)	3
35	2244110135	車頭	1
35-A	2244110135A	車頭上座	1
35-B	2270000135B	車頭下座	1
35-C	2274110135C	後車頭上座	1
36	2200000136	孔塞 Plug	1
37	2200000137	孔塞 Plug	1
38	2200000110	下座腳樁 Supporting Bar	4
39	8MC04280807D	螺絲 Screw (CT0130 M4-0.7*8)	3
40	2200000129	壓板 Holder	1
41	2200000128	磁鐵 Magnet	1
42	2200000127	油封 Gasket	1
43	2220000126	油盤 Oil Reservoir	1
44	2100000244	油封 Seal	1
45	8SM95281017A	螺樁 Stud (SH0243 3/8"-28*10)	1
46	8MB03200405A	螺絲 Screw (FT0548 M3-0.5*4)	2
47	22200001182	檔片 Defender	1
48	2220000112	油封 Gasket	1
49	8MN03200300A	螺絲 Screw (CT0115 M3-0.5*3)	2
50	22200001141	樞銷 Hinge Pin	1
51	8MP85241006A	螺絲 Serew (M3.5-0.6*10)	2
52	8MB85241006K	螺絲 Screw (CT0621 M3.5-0.6*10)	2
53	2220000111	固定座 Backet	1
54	2220000119	下軸側蓋 Side Cover	1
55	2220000115	彈簧 Spring	1
56	2220000116	下軸側蓋 Side Cover	1
57	2220000117	夾簧 Latch Spring	1
58	8MK04280507A	螺絲 Screw (WPC0106 M4-0.7*5)	1
59	2240000106	側蓋 Side Cover	1
60	8MC04283307D	螺絲 Screw (C80147 M4-0.7*33)	2
61	8MN06400600A	螺絲 Screw (CT0244 M6-1*6)	2
62	22000002451	孔塞 Plug	1
63	90OR040	O形油環 O Ring	1
64	8MM04283007B	螺絲 Screw (C13-59 M4-0.7*30)	1
65	2274110162	油封 Gasket	1

2. CTU9011 本體與外裝零件 Frame Components For CTU9011 (二)

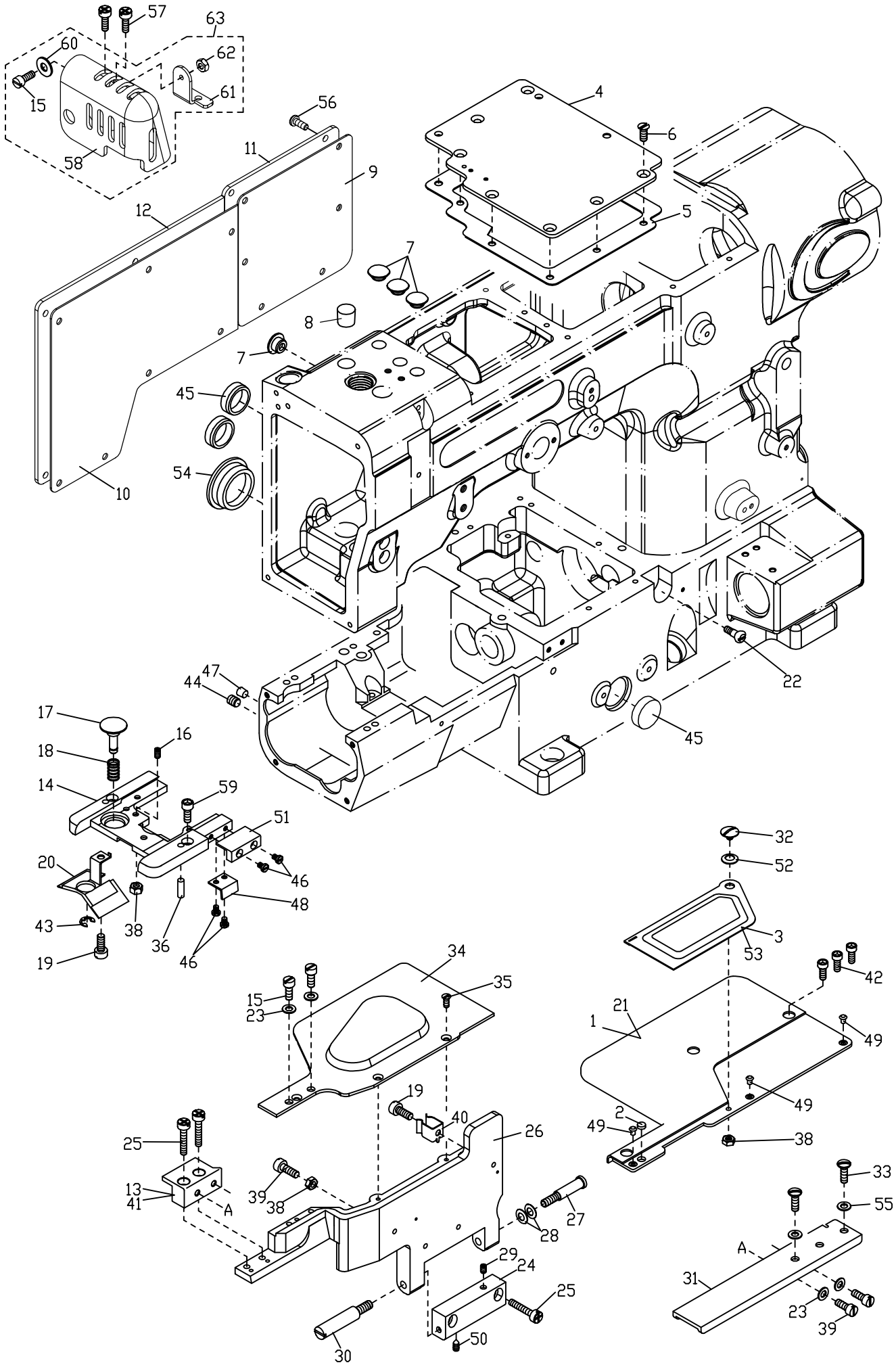

2. CTU9011 本體與外裝零件 Frame Components For CTU9011 (二)

序號 Ref.No	物料編號 Parts No.	名稱 Description	單位用量 Amt.Req.
*1	2270000201	下軸外蓋 Cloth Plate	1
2	2270000202	磁鐵 Magnet	1
*3	2270000203	防塵蓋 Dust Cover	1
4	2270000204	下軸內蓋 Lower Shaft Cover	1
5	2220000205	防油墊片 Gasket	1
6	8ME04280708A	螺絲 Screw (CT0206 M4-0.7*7)	7
7	22000001091	孔塞 Plug	4
8	22000002081	孔塞 Plug	1
9	2274110209	油封 Gasket	1
10	2274110210	油封 Gasket	1
11	2274110211	上軸背蓋 Rear Cover	1
12	2274110212	上軸背蓋 Rear Cover	1
*13	2270000213	下座前蓋活動塊 Movable Block	1
14	2220000214	針鈑座 Needle Plate Seat	1
15	8MB04280807K	螺絲 Screw (CT0215 M4-0.7*8)	3
16	8MN04281000A	螺絲 Screw (CT0216 M4-0.7*10)	1
17	2220000217	按鈕 Push Button	1
18	2200000218	彈簧 Spring	1
19	8MC04280507D	螺絲 Screw (CT0122 M4-0.7*5)	2
20	2220000220	油封 Oil Defender	1
**21	2270000221	下軸外蓋 Cloth Plate	1
22	8MD04281408C	螺樁 Stud (CT0222 M4-0.7*5)	1
23	2100000223	墊圈 Washer	4
24	2200000224	絞鏈 Hinge	1
25	8MC04281407D	螺絲 Screw (CT0225 M4-0.7*14)	4
26	2270000226	下座前蓋 Front Cover	1
27	8MB04283809E	螺樁 Stud (CT0227 M4-0.7*38)	1
28	2200000228	盂形墊圈 Disk Washer	2
29	8MN04280400A	螺絲 Screw (CT0229 M4-0.7*4)	1
30	8MB04280605M	螺樁 Stud (CT0230 M4-0.7*6)	1
31	2200000231	輔助緣板 Auxiliary Cloth Plate	1
32	8MC04280512B	螺絲 Screw (C90232 M4-0.7*5)	1
33	8MB05321008K	螺絲 Screw (CT0233 M5-0.8*10)	2
34	2270000234	護線蓋 Cloth Plate	1
35	8ME03200606A	螺絲 Screw (CT0235 M3-0.5*6)	3
36	90ST0410	定位銷 Knock Pin	2
37	----------	----------	-
38	8MA04280307A	螺帽 Nut (CT0238 M4-0.7*3)	3
39	8MB04281207K	螺絲 Screw (CT0239 M4-0.7*12)	3
40	2200000121	夾簧 Latch Spring	1
**41	2270000241	下座前蓋活動塊 Movable Block	1
42	8MM04281207A	螺絲 Screw (CT0202 M4-0.7*12)	3
43	90ER040	E形扣環 E-Ring	1
44	8MN06400600A	螺絲 Screw (CT0244 M6-1*6)	2
45	22000002451	孔塞 Plug	3
46	8MB03200405A	螺絲 Screw (FT0548 M3-0.5*4)	4
47	22000002471	孔塞 Plug	2
48	2200000250	擋片 Defender	1
49	22100001191	減震橡膠 Rubber Cushion	3
50	8MN04280500C	螺絲 Screw (FT1222 M4-0.7*5)	1
51	2220000257	擋片 Defender	1
52	2200000124	盂形墊圈 Disc Washer	1
**53	2270000253	防塵蓋 Dust Cover	1
54	22000002461	孔塞 Plug	1
55	2200001025	墊圈 Washer	2
56	8MC04281007D	螺絲 Screw (CT0113 M4-0.7*10)	13
57	8MC04280807D	螺絲 Screw (CT0130 M4-0.7*8)	2
58	22700002121	針棒護蓋 Needle Bar Protector	1
59	8MM04280807A	螺絲 Screw (M01-24 M4-0.7*8)	2
60	90DW040	墊圈 Washer	1
61	2270000211	基座 Base	1
62	8MA04280207A	螺帽 Nut (STC02-01-02 M4-0.7*2.5)	1
63	227A0000259	針棒護蓋組 Needle Bar Protector Asm.	1

* : 40M,48M,56M用 For 40M, 48M,56M
**: 64M 用 For 64M

3. CTU9011 導線與張力調整零件 Thread Guide Tension Components For CTU9011

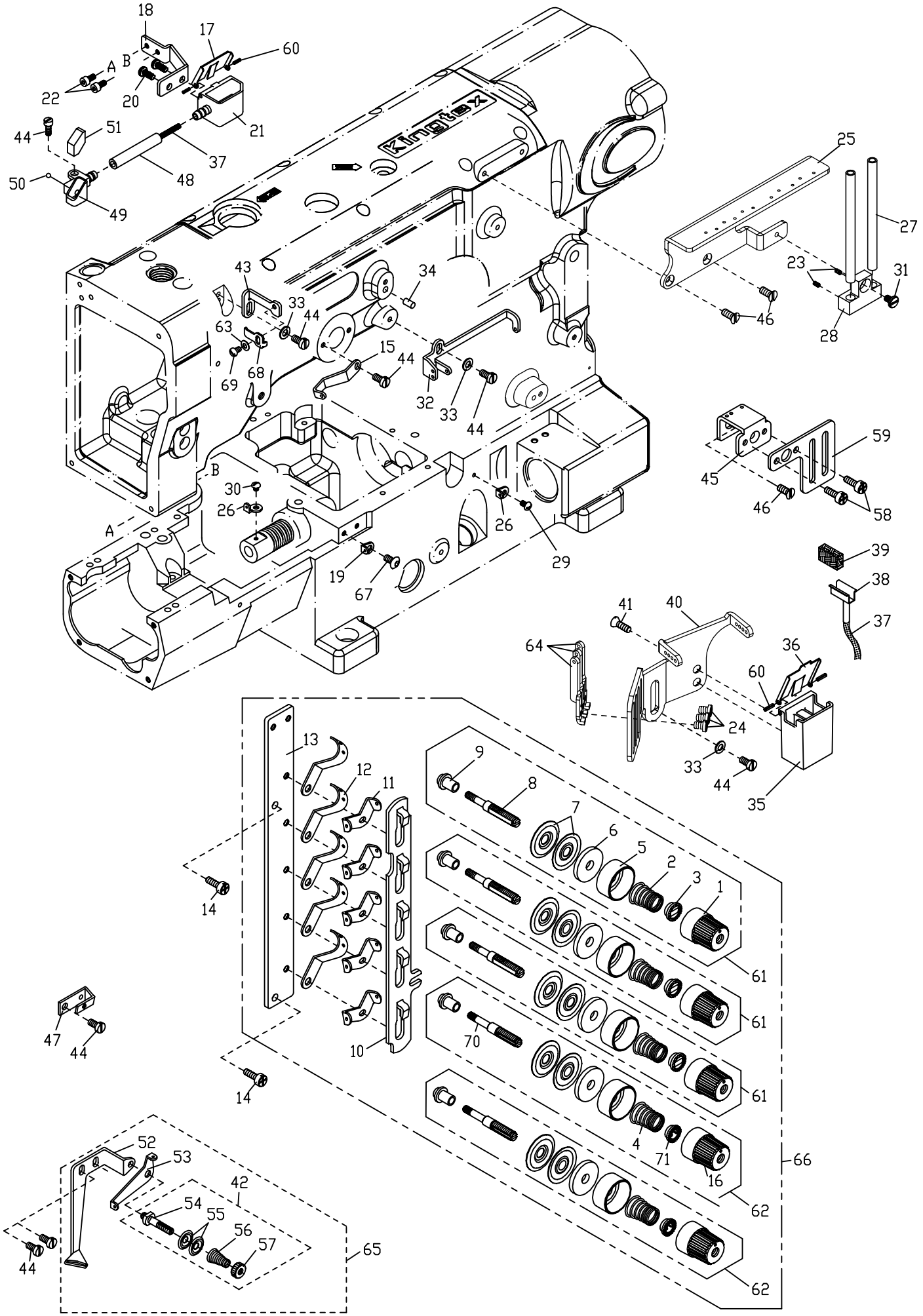

3. CTU9011 導針與張力調整零件 Thread Guide And Tension Components For CTU9011

序號 Ref.No.	物料編號 Parts No.	名稱 Description	單位用量 Amt. Req.
1	2100001121	張力調整螺帽 Tension Nut (Red) (SH1121)	3
2	2100001123	彈簧 Spring (Red) (SH1123)	3
3	2200000303	套管 Bushing	3
4	2100041131	彈簧 Spring (Yellow) (SH1131)	2
5	2200000305	彈簧座 Spring Seat	5
6	2100001127	羊毛氈 Felt	5
7	2100001126	張力控制盤 Tension Disc	10
8	22000003081	螺樁 Stud	3
9	22000003091	隔環 Spacer	5
10	4UTB0004191	鬆線滑板 Release Wedge	1
11	2200000311	導線 Thread Guide	5
12	2200000312	導線 Thread Guide	5
13	4UTB000420	張力控制組座 Tension Post Support	1
14	8MC04280807D	螺絲 Screw (CT0130 M4-0.7*8)	2
15	2210000317	導線 Thread Guide	1
16	2100001121A	張力調整螺帽 Tension Nut (Yellow) (SH1121)	2
17	2200000725	冷卻油槽蓋 Cooler Oil Tank Cover	1
18	2270000318	支架 Knife Holder Bracket	1
19	2270000319	導線 Thread Guide	1
20	8TC85520806A	螺絲 Screw	2
21	22000007261	冷卻油槽 Cooler Oil Tank	1
22	8MM04280807A	螺絲 Screw (MT0124 M4-0.7*8)	2
23	8MN03200300A	螺絲 Screw (CT0115 M3-0.5*3)	2
24	8MB03200405A	螺絲 Screw (FT0548 M3-0.5*4)	3
25	22400003021	導線座 Thread Guide Holder	1
26	2200001008	導線 Thread Guide	2
27	2200000327	導線管 Thread Guide Pipe	2
28	2240000301	導線座 Thread Guide Holder	1
29	8MD03200606A	螺絲 Screw (CT0326 M3-0.5*6)	1
30	8MD03200306A	螺絲 Screw (CT0242 M3-0.5*3)	1
31	8MB04280608A	螺絲 Screw (UTB0130 M4-0.7*6)	1
32	2210000326	導線 Thread Guide	1
33	2100000223	墊圈 Washer	3
34	90ST0410	定位銷 Knock Pin	1
35	22000003351	油杯 Cooler Oil Tank	1
36	2200000336	油杯蓋 Cooler Oil Tank Cover	1
37	66800	油線 Oil Wick	2
38	2200000338	線夾 Wick Clamp	1
39	2200000339	羊毛氈 Felt	1
40	2270000340	導線 Thread Guide	1
41	8TE03440806A	螺絲 Screw	2
42	227A0000342	張力控制組 Thread Retainer Asm.	1
43	2600000343	導線 Thread Guide	1
44	8MB04280807K	螺絲 Screw (CT0215 M4-0.7*8)	8
45	2200000345	導線 Thread Guide	1
46	8ME04280708A	螺絲 Screw (CT0206 M4-0.7*7)	3
47	2200000347	張力控制組座 Thread Retainer Support	1
48	66792	油管 Oil Tube (⌀4.6 * ⌀6.3 * 42 L)	1
49	22000007311	羊毛氈承座 Felt Seat	1
50	2100000403	孔塞 Plug	1
51	2200000732	羊毛氈 Felt	1
52	2200000352	導線 Thread Guide	1
53	2200000353	導線 Thread Guide	1
54	2200000354	螺樁 Stud	1
55	2200000355	張力控制盤 Tension Disc	2
56	2200000356	彈簧 Spring	1
57	2200000357	螺帽 Nut	1
58	8MC04280507D	螺絲 Screw (CT0122 M4-0.7*5)	2
59	2200000359	揚線臂護線罩 Take-up Arm Protect	1
60	90SP0206T	彈簧銷 Spring Pin	4
61	231A0001922	張力控制組 Tension Asm. (Red)	3
62	220A0000315	張力控制組 Tension Asm. (Yellow)	2
63	90DW030	碟形墊圈 Disk Washer	1
64	2270000364	導線桿 Thread Guide	3
65	220A0000365	鬆線組 Therad Tension Mechanism	1
66	224A00003171	鬆線組 Therad Tension Mechanism	1
67	8MP04280808A	螺絲 Screw (MT0235 M4-0.7*8)	1
68	2600000307	導線 Thread Guide	1
69	8MB03200506K	螺絲 Screw (CT0525 M3-0.5*5)	1
70	22000003611	螺樁 Stud	2
71	2100001122	止滑齒輪 Bush	2

4. CTU9011 軸襯與油封 Bushing And Seal For CTU9011

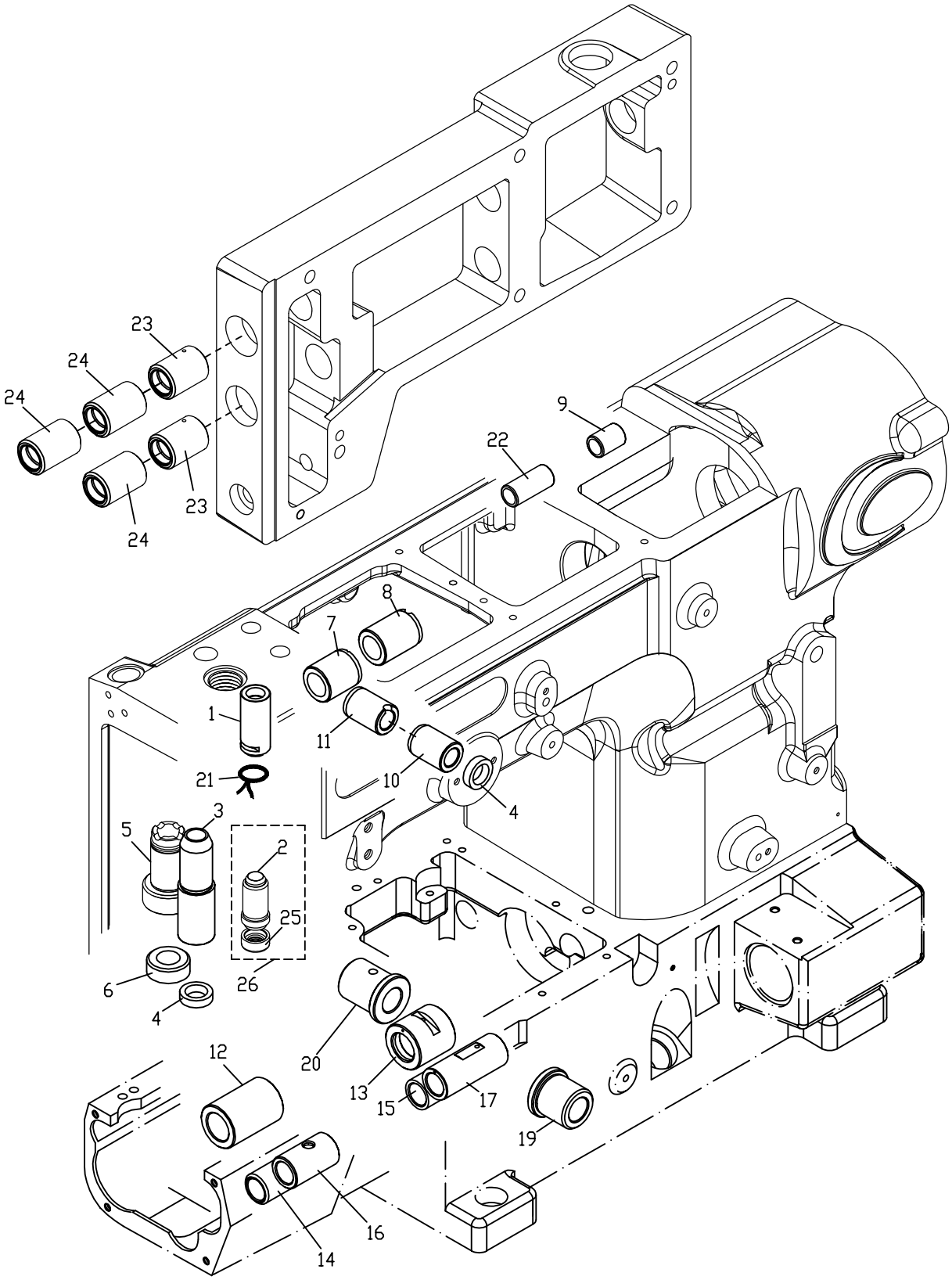

4. CTU9011 軸襯與油封 Bushing And Seal For CTU9011

序號 Ref.No.	物料編號 Parts No.	名稱 Description	單位用量 Amt. Req.
1	2210000401	軸襯 Bushing	1
2	22000004021	軸襯 Bushing	1
3	2274110403	軸襯 Bushing	1
4	2200000404	油封 Oil Seal	2
5	22200004051	軸襯 Bushing	1
6	2200000406	油封 Oil Seal	1
7	2210000408	軸襯 Bushing	1
8	2200000408	軸襯 Bushing	1
9	2240000409	軸襯 Bushing	1
10	22000004101	軸襯 Bushing	1
11	2274110411	軸襯 Bushing	1
12	22000004121	軸襯 Bushing	1
13	2200000413	軸襯 Bushing	1
14	2200000414	軸襯 Bushing	1
15	2200000415	軸襯 Bushing	1
16	2200000416	軸襯 Bushing	1
17	2200000417	軸襯 Bushing	1
18	----------	----------	1
19	22000004191	軸襯 Bushing	-
20	22000004201	軸襯 Bushing	1
21	66800	油線 Oil Wick	1
22	2240000422	軸襯 Bushing	1
23	22741104231	軸襯 Bushing	2
24	22741104241	軸襯 Bushing	3
25	2270001017	橡膠環 Rubber Washer	1
26	227A0000423	軸襯組 Bushing Asm.	1

5. CTD9000 / CTU9011 下軸與相關零件 Lower Main Shaft Components

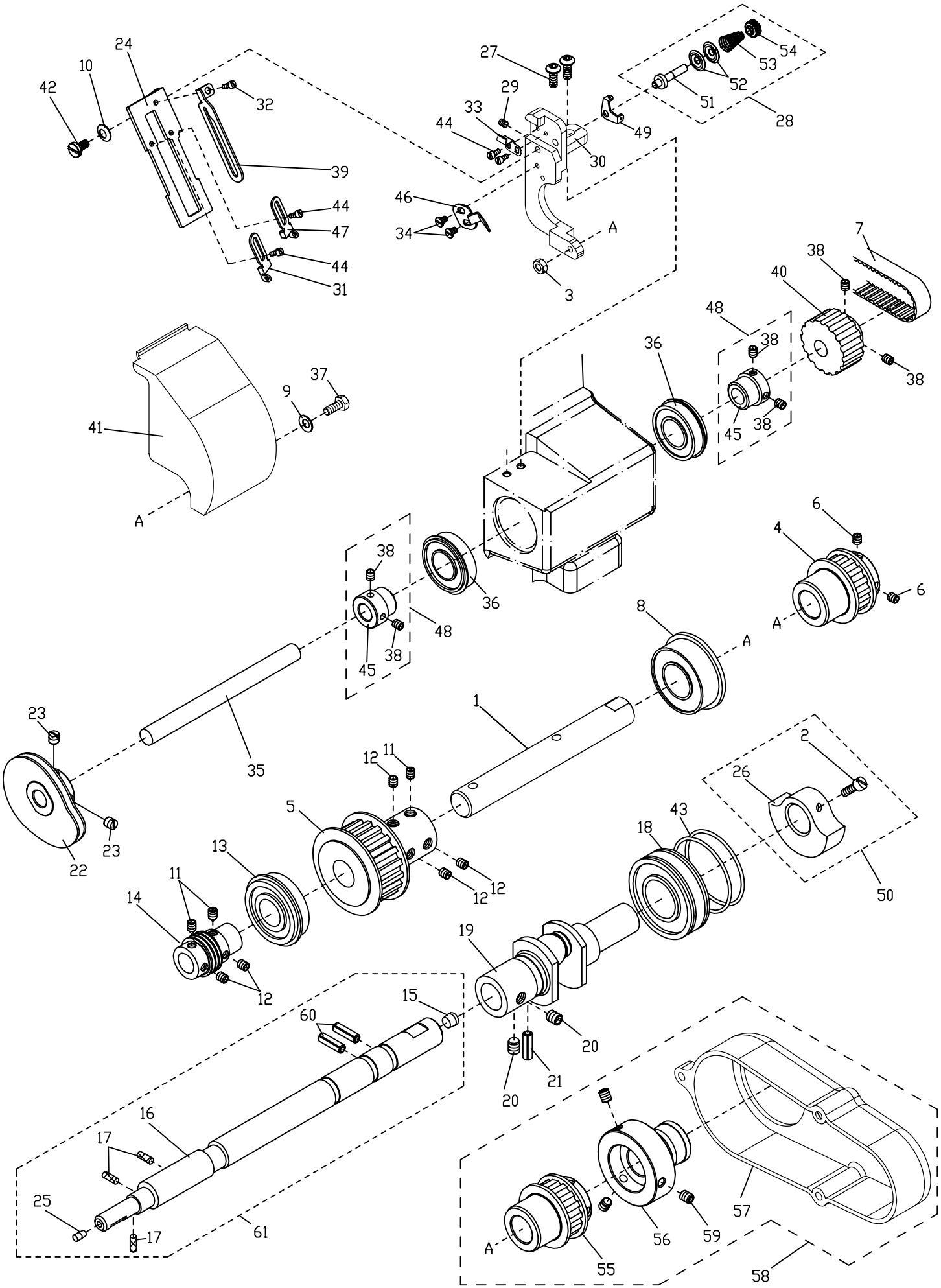

5. CTD9000 / CTU9011下軸與相關零件 Lower Main Shaft Components

序號 Ref.No.	物料編號 Parts No.	名稱 Description	單位用量 Amt.Req.
1	22400005011	軸 Shaft	1
2	8MB04280807K	螺絲 Screw (CT0215 M4-0.7*8)	2
3	8MA04280307A	螺帽 Nut (CT0238 M4-0.7*3)	1
4	2220000504	齒形皮帶輪 Timeing Pulley	1
5	2240000505	齒形皮帶輪 Timeing Pulley	1
6	8MN05320500E	螺絲 Screw (CT0903 M5-0.8*5)	2
7	90TB2853GT	齒形皮帶 Timeing Belt	1
8	90BB2552154	滾珠軸承 Ball Bearing	1
9	90DW040	碟形墊圈 Disk Washer	1
10	2200000228	碟形墊圈 Disk Washer	1
11	8MN06400800C	螺絲 Screw (FT0502 M6-1*8)	3
12	8MN06400600A	螺絲 Screw (CT0244 M6-1*6)	5
13	90BB2047144	滾珠軸承 Ball Bearing	1
14	2200000508	蝸桿 Warm	1
15	2200000515	孔塞 Plug	1
16	2200000516	軸 Shaft	1
17	66801	油線 Oil Wick	3
18	90BB2042122	滾珠軸承 Ball Bearing	1
19	2200000512	曲軸 Crank Shaft	1
20	8MN06400500A	螺絲 Screw (CT0513 M6-1*5)	2
21	90SP0206	彈簧銷 Pin	1
22	2270000522	揚線凸輪 Looper Thread Takeup Cam	1
23	8MH05320400A	螺絲 Screw (CT0523 M5-0.8*4)	2
24	2270000524	導線固定板 Thread Guide Seat	1
25	2200000550	孔塞 Plug	1
26	2200000509	平衡錘 Balance Weight	1
27	8MP04281008A	螺絲 Screw (MT0250 M4-0.7*10)	2
28	227A0000342	張力控制組 Thread Retainer Asm	1
29	8MN03200500A	螺絲 Screw (STB-01-16 M3-0.5*5)	1
30	22700005301	固定座 Bracket	1
31	2220000548	導線 Thread Guide	1
32	8MB03200306A	螺絲 Screw (FT0208 M3-0.5*3)	1
33	22700005331	夾簧 Latch Spring	1
34	8MB03200405A	螺絲 Screw (FT0548 M3-0.5*4)	2
35	2270000535	軸 Shaft	1
36	90BB152807	滾珠軸承 Ball Bearing	2
37	8MK04281007A	螺絲 Screw (FT0217 M4-0.7*10)	1
38	8MN04280400A	螺絲 Screw (CT0229 M4-0.7*4)	6
39	2270000539	導線 Thread Guide	1
40	2220000540	齒形皮帶輪 Timeing Pulley	1
41	22700005411	凸輪護蓋 Cam Cover	1
42	8MB04281008G	螺絲 Screw (C90549 M4-0.7*10)	1
43	2200000547	O形油環 O Ring	2
44	8MB75180405A	螺絲 Screw (CT0529 M2.5-0.45*3.5)	4
45	2270000545	套管接頭 Joint	2
46	2220000550	夾簧 Latch Spring	1
47	2220000547	導線 Thread Guide	1
48	227A0000552	套管接頭組 Joint Asm	2
49	2270000317	導線 Thread Guide	1
50	222A0000647	平衡錘組 Balance Weight Asm	1
51	2200000354	螺樁 Stud	1
52	2200000355	張力控制盤 Tension Disc	2
53	2200000356	彈簧 Spring	1
54	2200000357	螺帽 Nut	1
*55	2240000555	齒形皮帶輪 Timeing Pulley	1
*56	2240000556	套管 Joint	1
*57	2240000557	側蓋 Side Cover	1
*58	224A0000558	套管接頭組 Joint Asm	1
*59	8MN05320600A	螺絲 Screw (MT0729 M5-0.8*6)	3
60	90SP0206T	彈簧銷 Pin	2
61	220A0000553	下軸組 Lower Shaft Set.	1

* 特註品 Custom-made Item (搭配數針器使用)

6. CTU9011 / CTU9711 / FTU7011 / CXU2000 / CXN2000 / CTU9100
上軸與相關零件 Upper Main Shaft Components

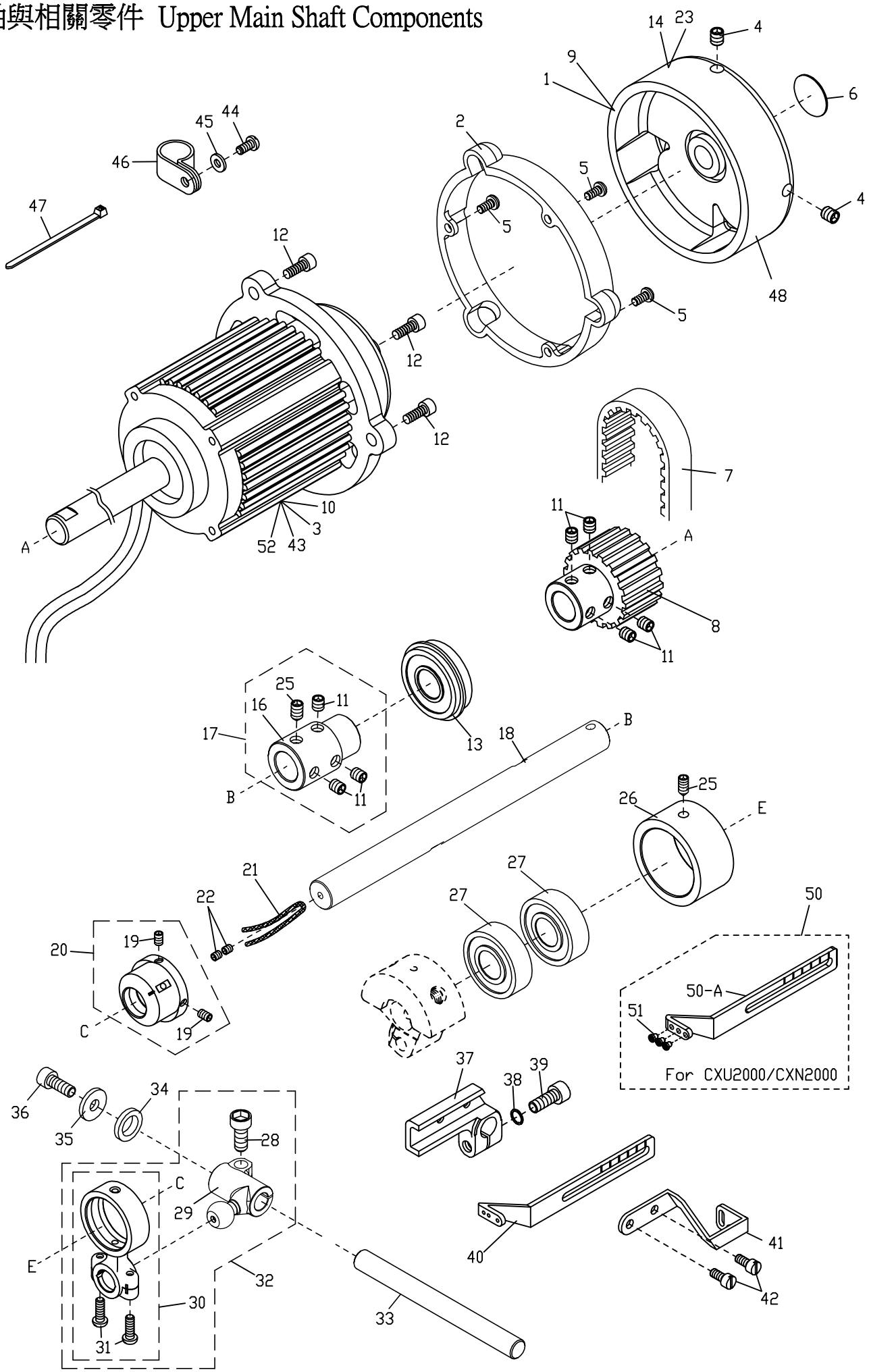

6. CTU9011 / CTU9711 / FTU7011 / CXU2000 / CXN2000 / CTU9100

上軸與相關零件 Upper Main Shaft Components

序號 Ref.No.	物料編號 Parts No.	名稱 Description	單位用量 Amt. Req.
◎1	2240000601	賀欣手輪 Handwheel	1
2	2240000602	護蓋 Cover	1
◎3	22400006032	賀欣迷你馬達 Mini Motor	1
4	8MN06400800A	螺絲 Screw (CT0549 M6-1*8)	2
5	8MP04280808A	螺絲 Screw (MT0235 M4-0.7*8)	3
6	66485-10	銘板 Plate	1
7	2200000607	齒形皮帶 Timeing Belt	1
8	22400006081	齒形皮帶輪 Timeing Pulley	1
◎9	2240000601S	菘慶手輪 Handwheel	1
◎10	2240000603S	菘慶迷你馬達 Mini Motor	1
11	8MN06400600A	螺絲 Screw(CT0244 M6-1*6)	7
12	8MM06401610A	螺絲 Screw (CT0625 M6-1*16)	3
13	90BB2047144	滾珠軸承 Ball Bearing	1
◎14	2604110601	賀欣手輪 Handwheel	1
15	----------	----------	-
16	2200000610	套管接頭 Joint	1
17	227411A0617	套管接頭組 Joint Asm	1
18	22741106181	曲軸 Crank Shaft	1
19	8MN05320500E	螺絲 Screw(CT0903 M5-0.8*5)	2
20	2274110620	偏心輪 Eccentric	1
21	66800	油線 Oil Wick	1
22	8MN04280400A	螺絲 Screw (CT0229 M4-0.7*4)	2
◎23	2604110601S	菘慶手輪 Handwheel	1
24	----------	----------	-
25	8MN06400800C	螺絲 Screw(C05-02 M6-1*8)	2
26	2240000612	軸承套筒 Bearing Sleeve	1
27	90BB1535115	滾珠軸承 Ball Bearing	2
28	8MM06401210A	螺絲 Screw (F11-03 M6-1*12)	1
29	2274110629	曲柄 Ball Lever	1
30	22741106301	連桿 Connecting Rod	1
31	8MB04281207K	螺絲 Screw(CT0239 M4-0.7*12)	2
32	227411A0632	連桿組 Connecting Rod Asm	1
33	2200000629	軸 Shaft	1
34	2274110634	墊圈 Washer	1
35	2200000627	墊圈 Washer	1
36	8MM05321009A	螺絲 Screw (CT0626 M5-08*10)	1
37	2200000630	承座 Bracket	1
38	90SW050	彈簧墊圈 Spring Washer	1
39	8MM05321409A	螺絲 Screw (CT0632 M5-0.8*14)	1
40	2200000633	針線揚線桿 Thread Take-up	1
41	2220000634	裝飾線揚線桿 Thread Take-up	1
42	8MB85240807K	螺絲 Screw (FT0555 M3.5-0.6*8)	2
◎43	2600000661	賀欣迷你馬達 Mini Motor	1
44	8MB04280807K	螺絲 Screw (C02-15 M4-0.7*8)	1
45	2100000223	墊圈 Washer	1
46	4MN0210108	線夾 Cord Clamp	1
47	4UTB020306	束線Plastic Binding Wire	1
◎48	2234110601	賀欣手輪 Handwheel	1
49	----------	----------	-
△50	2600000633	導線組 Thread Guide Asm.	1
△50-A	2600000633A	導線 Thread Guide	1
△51	240013088	磁導線環 Thread Eyelet	3
◎52	2240000603M	ISM迷你馬達 Mini Motor	1

◎ 選購 To pick and make purchase
△ For CXU2000 / CXN2000 用

◎ CTU9011 / CTU9711 / CTU9100 馬達選購 (Motor Optional) :

廠商 Company	序號 Ref. No.	
賀 欣 Hohsing	1	3
菘 慶 Shokei	9	10
永輝興 ISM	1	52

◎ CXU2000 馬達選購 (Motor Optional) :

廠商 Company	序號 Ref. No.	
賀 欣 Hohsing	14	3
菘 慶 Shokei	23	10
永輝興 ISM	14	52

◎ FTU7011 馬達選購 (Motor Optional) :

廠商 Company	序號 Ref. No.	
賀 欣 Hohsing	48	3
永輝興 ISM	48	52

◎ CXN2000 馬達選購 (Motor Optional) :

廠商 Company	序號 Ref. No.	
賀 欣 Hohsing	14	43

7. CTU9011 / CTU9711 / CXU2000 / CXN2000
針棒與相關零件 Needle Bar Components

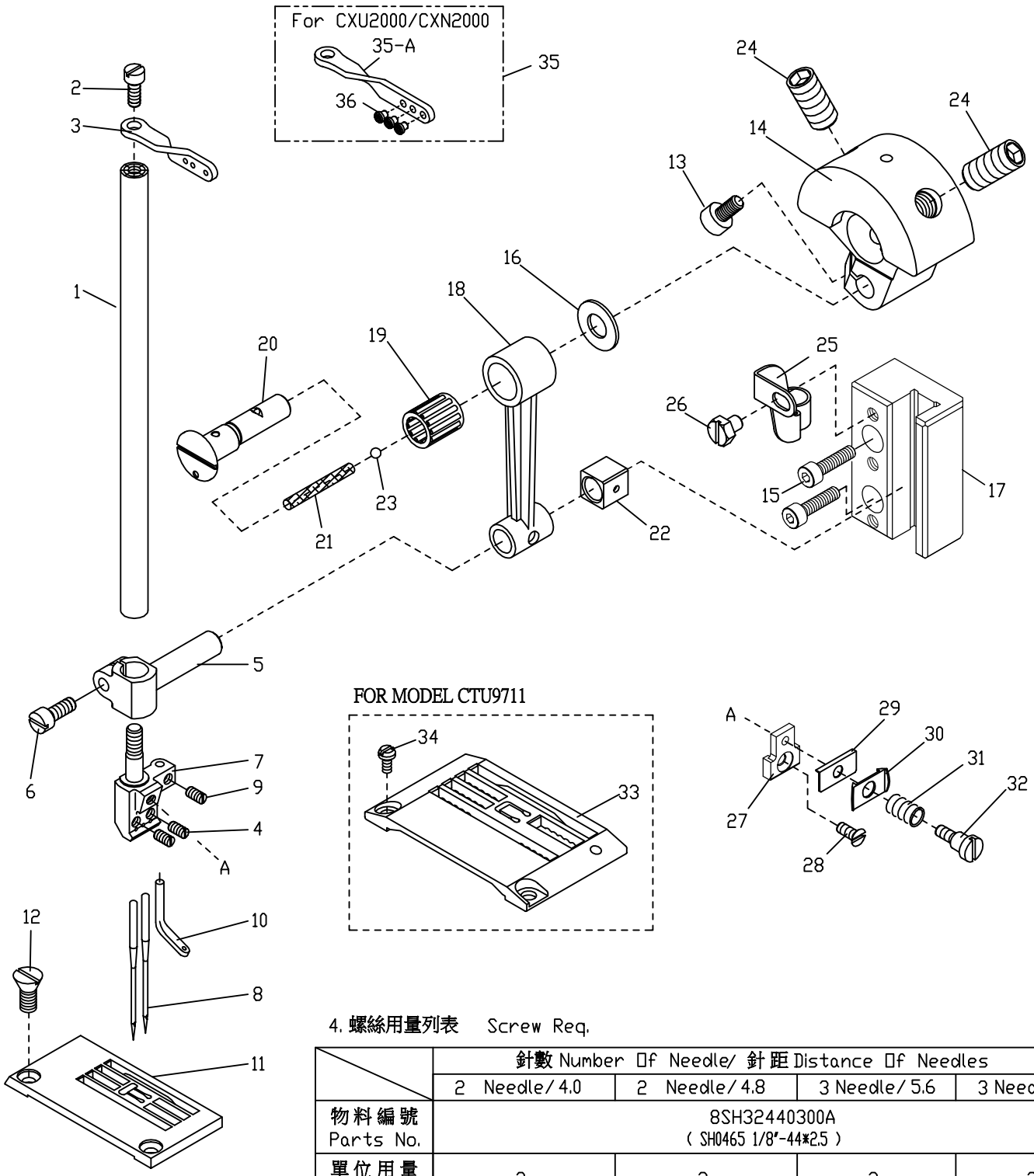

4. 螺絲用量列表 Screw Req.

	針數 Number Of Needle/ 針距 Distance Of Needles			
	2 Needle/4.0	2 Needle/4.8	3 Needle/5.6	3 Needle/6.4
物料編號 Parts No.	8SH32440300A (SH0465 1/8"-44*2.5)			
單位用量 Amt. Req.	2	2	3	3

序號 Ref.No.	名稱 Description	針數 Number Of Needle / 針距 Distance Of Needles			
		2 Needle/4.0	2 Needle/4.8	3 Needle/5.6	3 Needle/6.4
7	針留 Needle Clamp	5220NC00400	5220NC00480	5227NC00560	5227NC00640
11	針鈑 Needle Plate	5222TP00401	5220TP00484	5220TP00564	5220TP00642
**33	針鈑 Needle Plate	5226TP11403	5226TP11483	5226TP11563	5226TP11643

7. CTU9011 / CTU9711 / CXU2000 / CXN2000

針棒與相關零件 Needle Bar Components

序號 Ref.No.	物料編號 Parts No.	名稱 Description	單位用量 Amt. Req.
1	22000007011	針棒 Needle Bar	1
2	8MB85240607K	螺絲 Screw (CT0637 M3.5-0.6*6)	1
3	2200000703	導線 Thread Guide	1
4	----------	螺絲 Screw (See Left Page)	-
5	2210000705	針棒驅動銷 Needle Bar Clamp	1
6	8MB95301107K	螺絲 Screw (CT0706 M4.5-0.75*11)	1
7	----------	針留 Needle clamp (See Left Page)	1
8	66725-11-5	針 Needle (UY128GAS-每1包內有5支裝)	1
9	8SH32440300A	螺絲 Screw (SH0465 1/8"-44*2.5)	1
10	2200000710	導線 Thread Guide	1
11	----------	針鈑 Needle Plate (See Left Page)	1
12	8SF36400706C	螺絲 Screw (CT0712 9/64"-40*7.5)	2
13	8MM05321009A	螺絲 Screw (C06-26 M5-0.8*10)	1
14	2270000714	平衡錘 Balance Weight	1
15	8MM04281607A	螺絲 Screw (FT0202 M4-0.7*16)	2
16	2270000716	墊圈 Washer	1
17	22741107171	滑道 GuideBlock	1
18	2210000720	連桿 Connecting Rod	1
19	90NB081113	滾針軸承 Needle Bearing	1
20	2270000720	曲柄銷 Rod Pin	1
21	66800	油線 Oil Wick	1
22	2200000722	滑塊 Slide Block	1
23	2100001404	孔塞 Plug	1
24	8MN08401600E	螺絲 Screw (CT0618 M8-1*16)	2
25	22741107251	夾環 Clamp	1
26	8MK04280507A	螺絲 Screw (WPC-01-06 M4-0.7*5)	1
27	2274110727	張力控制組座 Thread Retainer Support	1
28	8ME03200506A	螺絲 Screw (C03-41 M3-0.5*4.5)	1
29	2200000348	針線控制板 Thread Guide Plate	1
30	2200000349	針線控制壓板 Tension Control plate	1
31	22000003501	彈簧 Spring	1
32	8MC03200807G	螺樁 Stud (CT0351 M3-0.5*8)	1
*33	----------	針鈑 Needle Plate (See Left Page)	1
*34	8MB03200506K	螺絲 Screw (CT0525 M3-0.5*5)	2
△35	2600000703	導線組 Thread Guide Asm.	1
△35-A	2600000703A	導線 Thread Guide	1
△36	240013088	磁導線環 Thread Eyelet	3

△ CXU2000 / CXN2000 機型使用 (For CXU2000 / CXN2000 Use)
* CTU9711 機型使用 (For CTU9711 Use)

8. CTU9011 / CTU9711 / FTU7011 / CXU2000 / CXN2000
壓腳與相關零件 Presser Foot Components

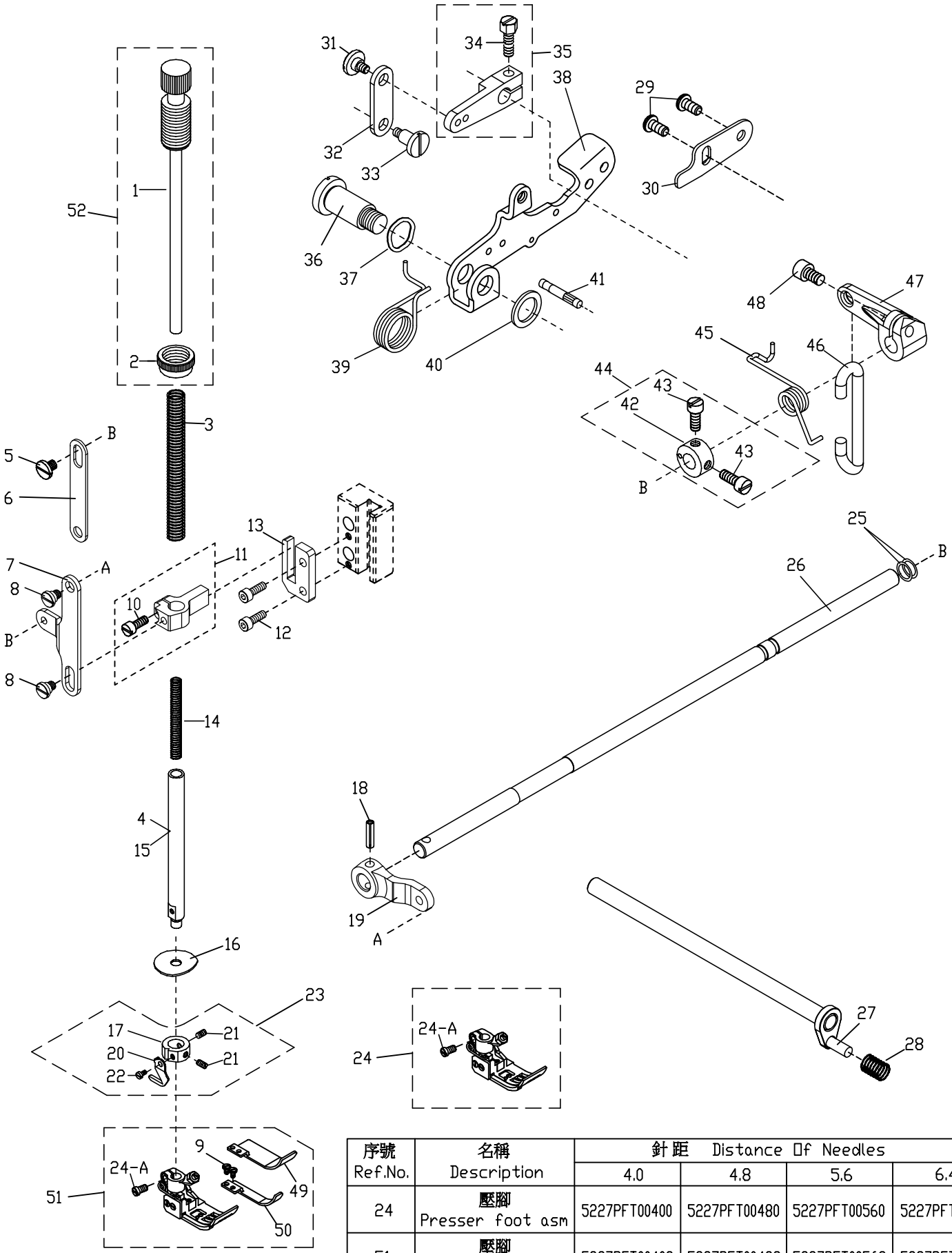

序號 Ref.No.	名稱 Description	針距 Distance Of Needles			
		4.0	4.8	5.6	6.4
24	壓腳 Presser foot asm	5227PFT00400	5227PFT00480	5227PFT00560	5227PFT00640
51	壓腳 Presser foot asm	5227PFT00402	5227PFT00482	5227PFT00562	5227PFT00642

8. CTU9011 / CTU9711 / FTU7011 / CXU2000 / CXN2000

壓腳與相關零件 Presser Foot Components

序號 Ref.No.	物料編號 Parts No.	名稱 Description	單位用量 Amt.Req.
1	2220000801	壓力調整螺樁 Spring Regulator	1
2	2220000803	螺帽 Nut	1
3	2200000804	彈簧 Spring	1
△4	2284110804	壓腳棒 Presser Bar	1
5	8MB05320509G	螺樁 Stud (CT0802 M5-0.8*5)	1
6	2274110806	連桿 Link	1
7	2274110807	連桿 Link	1
8	8MB05320709G	螺樁 Stud (CTF90-08-08 M5-0.8*6.5)	2
9	8SB24560404A	螺絲 Screw (FT1001 3/32"-56*3.8)	2
10	8MB95301107K	螺絲 Screw (CT0706 M4.5-0.75*11)	1
11	2274110811	壓腳棒連結臂 Presser Bar Clamp	1
12	8MM04281207A	螺絲 Screw (CT0202 M4-0.7*12)	2
13	2274110813	滑道 Guide Block	1
14	2200000809	彈簧 Spring	1
◎15	2200000810	壓腳棒 Presser Bar	1
16	2200000811	阻油片 Oil Separator	1
17	2220000812	限動環 Stop Collar	1
18	90SP0416	彈簧銷 Spring Pin	1
19	2274110819	連桿 Lever	1
20	2220000813	固定切刀 Knife	1
21	8MH85240300A	螺絲 Screw (CT0813 M3.5-0.6*3)	2
22	8MB03200405A	螺絲 Screw (FT0548 M3-0.5*4)	1
23	222A0000842	限動環組 Stop Collar Asm	1
**24	----------	壓腳 Presser Foot(See Left Page)	1
24-A	8MB85240706A	螺絲 Screw (CTS0122 M3.5-0.6*7)	1
25	2240000846	O形油環 O Ring	2
26	22400008241	軸 Shaft	1
27	2240000838	軸 Shift	1
28	4UTB000411	彈簧 Spring	1
*29	8MP06401011A	螺絲 Screw (MT0234 M6-1*10)	2
*30	2240000835	限位片 Stopper	1
*31	2310000344	螺樁 Stud	1
*32	2240000808	連桿 Link	1
*33	2310000343	螺樁 Stud	1
*34	8MK95301407A	螺絲 Screw (CT0837 M4.5-0.75*14)	1
*35	2240000806	曲柄 Drive Arm	1
36	2310001013	螺樁 Stud	1
37	2310001207	波形墊圈 Corrugated Ring	1
38	22400008331	揚昇臂 Lifter Arm	1
39	2240000839	彈簧 Spring	1
40	2310001012	墊圈 Washer	1
41	2310001017	銷 Pin	1
42	2200000822	定位環 Collar	1
43	8MC95300606F	螺絲 Screw (CT0823 M4.5-0.75*5.5)	2
44	220A0000825	定位環組 Collar Asm.	1
45	2240000826	彈簧 Spring	1
46	2240000802	吊桿 Lifter Connecting Plate	1
47	2240000827	連桿 Link	1
48	8MM06401210A	螺絲 Screw (F1103 M6-1*12)	1
49	5227PFT00562K	輔助壓腳底 Hinged Type Presser Foot	1
50	5227PFT00562J	輔助壓腳底 Hinged Type Presser Foot	1
51	----------	壓腳 Presser Foot(See Left Page)	1
52	222A0000843	壓力調整螺樁組 Spring Regulator Set	1

* 為標準型專用 , 切線 (UT 系列) 時不使用
* For basic model only. Not applicable to thread trimmer (UT series) series.

◎ : CTU9011 / CTU9711 / CXU2000 / CXN2000 機型用
△ : FTU7011 機型用
** : CXU2000 機型用

9. CTU9011 / CTU9711 / FTU7011 / CXU2000 / CXN2000 / CTU9100
裝飾線驅動機構　Spreader Mechanism

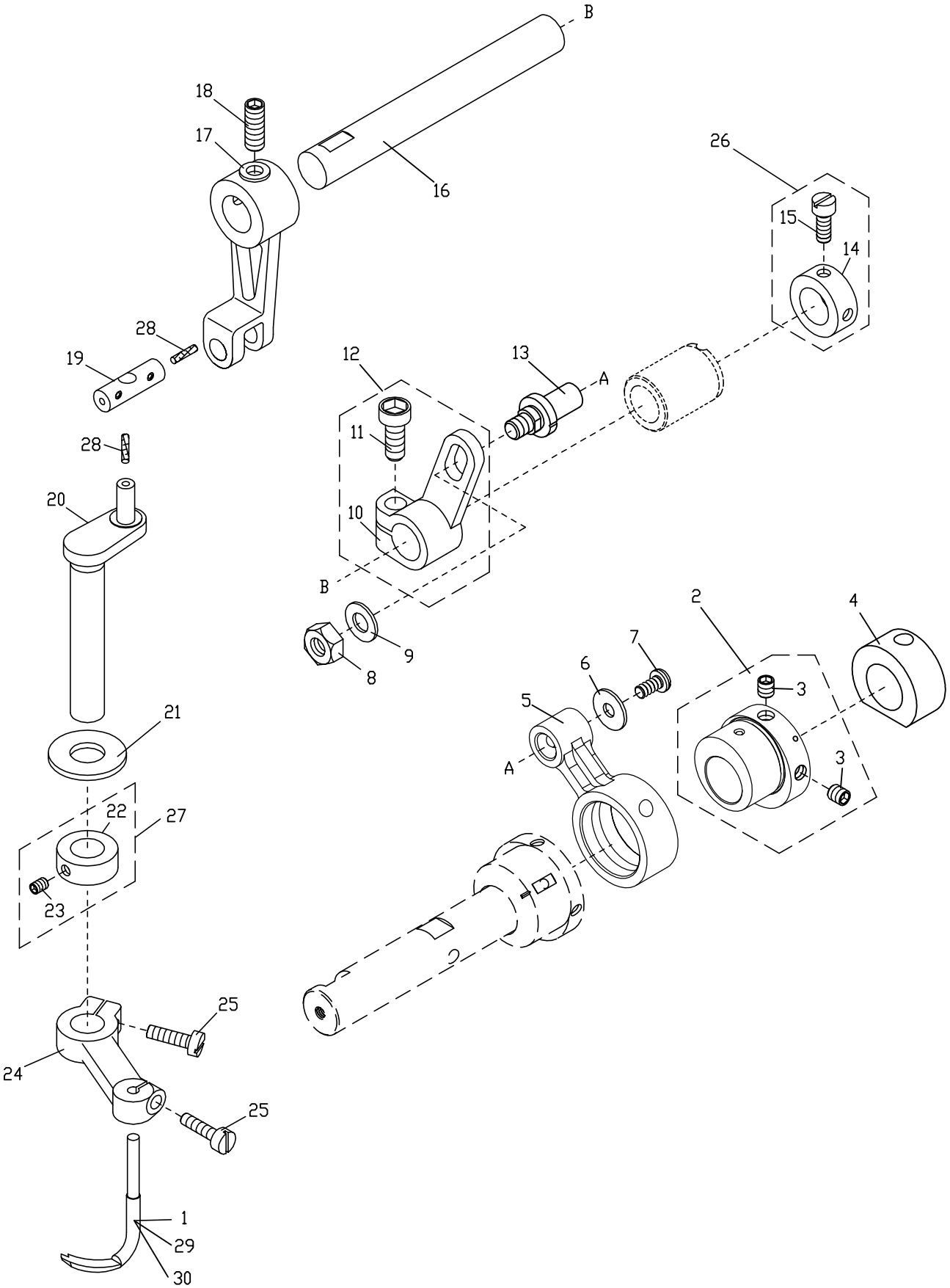

9. CTU9011 / CTU9711 / FTU7011 / CXU2000 / CXN2000 / CTU9100
裝飾線驅動機構 Spreader Mechanism

序號 Ref.No.	物料編號 Parts No.	名稱 Description	單位用量 Amt.Req.
*1	5227SLT00560	裝飾線結線鉤 Spreader	1
2	2274110902	偏心輪 Eccentric	1
3	8MN05320500E	螺絲 Screw (CT0903 M5-0.8*5)	2
4	2240000642	聚油環 Oil Sleeve	1
5	22741109051	連桿 Connecting Rod	1
6	2200000908	墊圈 Washer	1
7	8MB04280807K	螺絲 Screw (CT0215 M4-0.7*8)	1
8	8MA06400510A	螺帽 Nut (CT0533 M6-1*5)	1
9	2200000910	墊圈 Washer	1
10	2200000914	變距曲柄 Lever	1
11	8MM06401610A	螺絲 Screw (CT0625 M6-1*16)	1
12	222A0000929	變距曲柄 Lever	1
13	2200000909	曲柄銷 Rod Pin	1
14	2200000912	定位環 Collar	1
15	8MC95300606F	螺絲 Screw (CT0823 M4.5-0.75*5.5)	2
16	2200000916	軸 Shaft	1
17	2220000917	連桿 Connecting Rod	1
18	8MN06400600A	螺絲 Screw (CT0244 M6-1*6)	2
19	2220000919	連桿銷 Rod Pin	1
20	2220000920	曲軸 Crank Shaft	1
21	2200000921	墊圈 Washer	1
22	2200000922	定位環 Collar	1
23	8MN85240300A	螺絲 Screw (UH0302 M3.5-0.6*3)	2
24	22000009241	擺動臂 Spreader Arm	1
25	8MB04281207K	螺絲 Screw (CT0239 M4-0.7*12)	2
26	220A0000926	定位環組 Collar Asm	1
27	220A0000927	定位環組 Collar Asm	1
28	66801	油線 Oil Wick	2
**29	5228SLT00560	裝飾線結線鉤 Spreader	1
***30	5229SLT00560	裝飾線結線鉤 Spreader	1

* : CTU9011 / CTU9711 / CXU2000 / CXN2000 機型用
** : FTU7011 機型用
*** : CTU9100 機型用

10. CT9000 / CTD9000 / CTU9011 結線鉤驅動機構 Looper Driving Mechanism

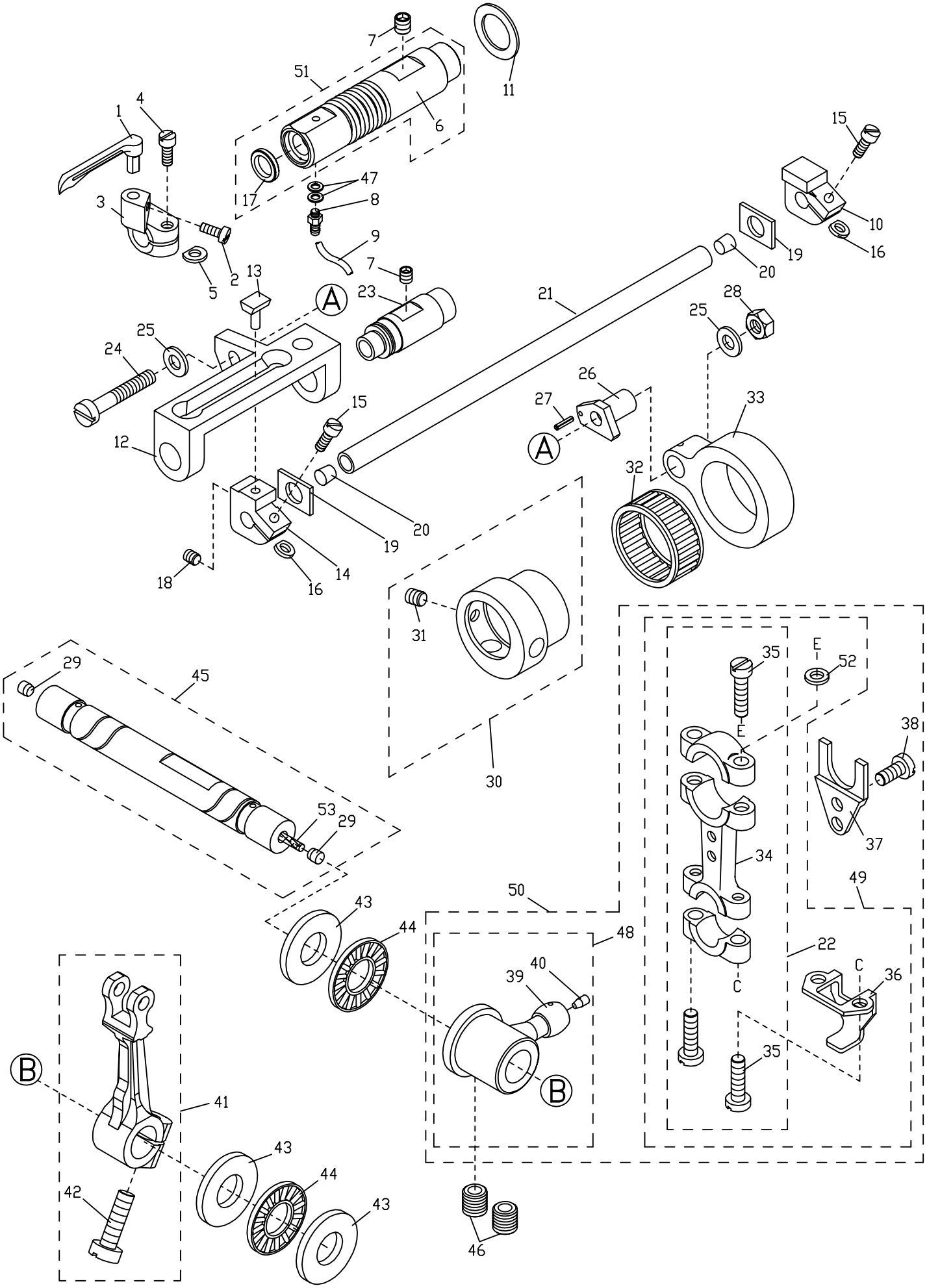

10. CT9000 / CTD9000 / CTU9011 結線鉤驅動機構 Looper Driving Mechanism

序號 Ref.No.	物料編號 Parts No.	名稱 Description	單位用量 Amt. Req.
1	5220LL00560	下結線鉤 Looper	1
2	8MB85240605A	螺絲 Screw (CT1002 M3.5--0.6*6)	1
3	2200001003	結線鉤座 Looper Holder	1
4	8MB85241006K	螺絲 Screw (CT0621 M3.5-0.6*10)	1
5	2200001005	墊圈 Washer	1
6	22200010063	軸襯 Bushing	1
7	8MN06400600A	螺絲 Screw (CT0244 M6-1*6)	2
8	2100001505	油嘴 Oil Tube Joint (SH1505)	1
9	66790	油管 Oil Tube (Ø2.9 * Ø5 * 120 L)	1
10	2220001010	滑塊固定座 Slider Holder	1
11	2200001011	墊圈 Washer	1
12	22200010121	滑道 Guide Block	1
13	2200001013	滑塊 Slide block	1
14	2200001014	滑塊固定座 Slider Holder	1
15	8MB85241106A	螺絲 Screw (CT1015 M3.5-0.6*11)	2
16	2200001016	墊圈 Washer	2
17	22700010171	油封 Oil Seal	1
18	8MN04280400A	螺絲 Screw (CT0229 M4-0.7*4)	1
19	2200001019	止推墊片 Thrust Plate	2
20	22000002471	孔塞 Plug	2
21	2220001021	結線鉤驅動軸 Looper Drive Bar	1
22	220A0001022	連桿組 Connecting Rod Asm	1
23	22200010231	軸襯 Bushing	1
24	8MB05323009B	螺絲 Screw (CT1024 M5-0.8*30)	1
25	2200001025	墊圈 Washer	2
26	2200001026	變距連桿銷 Adjusting Pin	1
27	2200001027	彈簧銷 Spring Pin	1
28	8MA05320408A	螺帽 Nut (CT1028 M5-0.8*4)	1
29	2200001029	孔塞 Plug	2
30	2200001030	偏心輪 Eccentric	1
31	8MN05320500E	螺絲 Screw (CT0903 M5-0.8*5)	1
32	90NB263013	滾針軸承 Needle Bearing	1
33	2200001033	連桿 Rod	1
34	2200001034	連桿 Connecting Rod	1
35	8MB95301407K	螺絲 Screw (CT0620 M4.5-0.75*14)	4
36	2200001036	潑油片 Oil Splasher	1
37	2200001037	定向導片 Orient Guide	1
38	8MB95301008A	螺絲 Screw (SS033-01-16 M4.5-0.75*10)	2
39	22000010391	曲柄 Lever	1
40	2100000328	孔塞 Plug	1
41	2260001041	擺動臂 Rocker Arm	1
42	8MM06401610A	螺絲 Screw (CT0625 M6-1*16)	1
43	2200001043	止推墊圈 Thrust Washer	3
44	2200001044	止推軸承 Thrust Bearing	2
45	2200001045	軸 Shaft	1
46	8MN08500800A	螺絲 Screw (CT10461 M8-1.25*8)	2
47	2200001047	墊圈 Washer	2
48	220A0001048	曲柄組 Lever Asm	1
49	220A0001049	連桿組 Connecting Rod Asm	1
50	220A0001050	連桿組 Connecting Rod Asm	1
51	227A00010511	軸襯組 Bushing Asm.	1
52	2100000640	墊圈 Washer	2
53	66800	油線 Oil Wick	1

11. CT9000 / CTD9000 / CTU9011 進給變換機構 Feed Control Driving

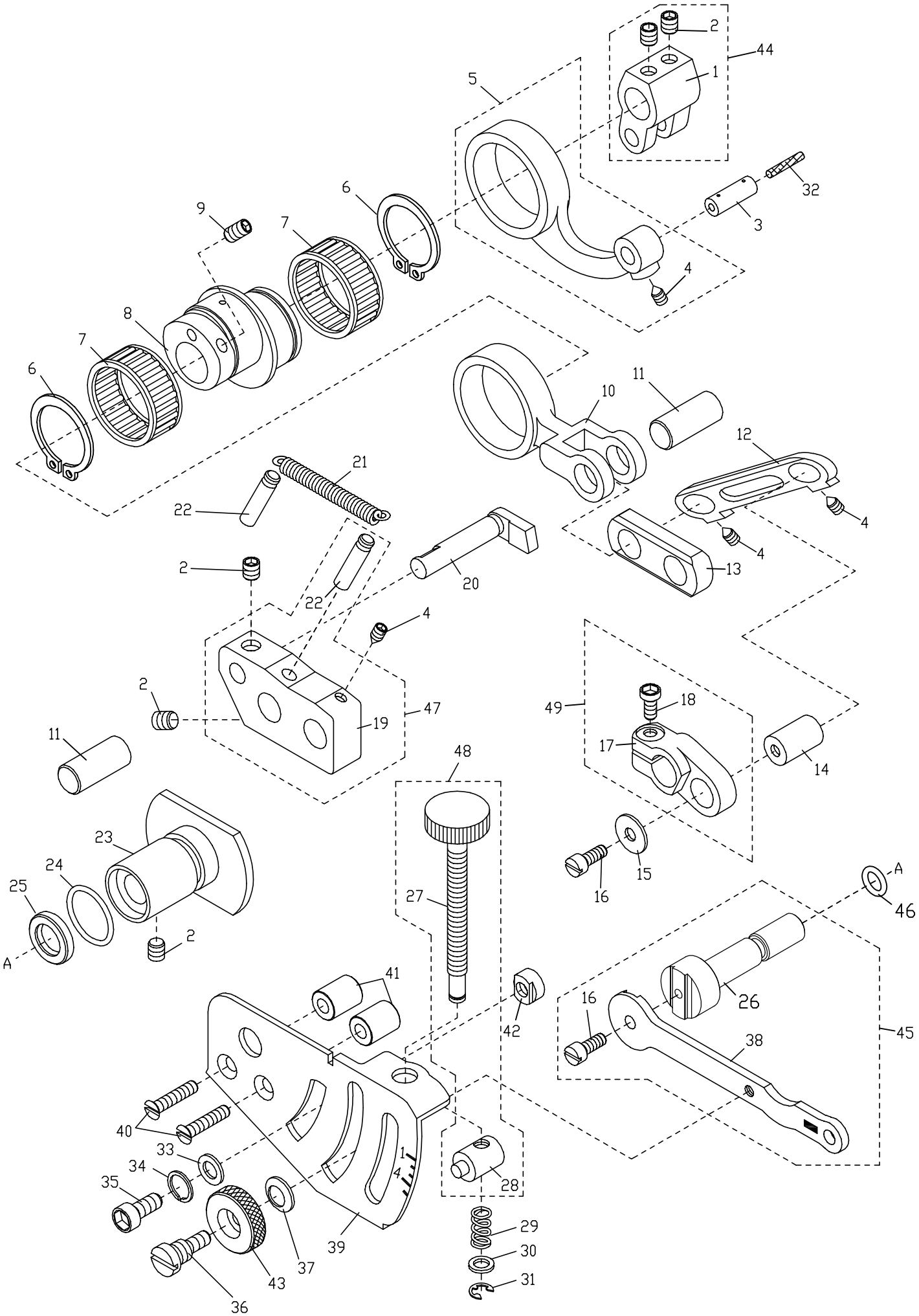

11. CT9000 / CTD9000 / CTU9011 進給變換機構 Feed Control Driving

序號 Ref.No.	物料編號 Parts No.	名稱 Description	單位用量 Amt. Req.
1	2200001101	曲柄 Lever	1
2	8MN06400600A	螺絲 Screw (CT0244 M6-1*6)	5
3	2200001103	曲柄銷 Rod Pin	1
4	8MN04280600C	螺絲 Screw (CT1104 M4-0.7*6)	4
5	2200001105	連桿 Rod	1
6	2200001106	C形軸用扣環 C Ring	2
7	90NB252910	滾針軸承 Needle Bearing	2
8	2200001108	偏心輪 Eccentric	1
9	8MN05320500E	螺絲 Screw (CT0903 M5-0.8*5)	2
10	2200001110	連桿 Rod	1
11	2200001111	連桿銷 Rod Pin	2
12	2200001112	連桿 Link	1
13	2200001113	連桿 Link	1
14	2200001114	曲柄銷 Lever Pin	1
15	2200001115	墊圈 Washer	1
16	8MB04280807K	螺絲 Screw (CT0215 M4-0.7*8)	2
17	2200001117	曲柄 Lever	1
18	8MM04281207A	螺絲 Screw (CT0202 M4-0.7*12)	1
19	2222001119	承座 Bracket	1
20	2200001120	懸臂式滑軌 Guide	1
21	22000011211	彈簧 Spring	1
22	2200001122	彈簧掛鉤 Pin	2
23	2200001123	軸襯 Bushing	1
24	90OR160	O形油環 O Ring	1
25	2200001125	油封 Oil Seal	1
26	2222001126	差動游標軸 Shaft	1
27	2222001127	調節螺樁 Adjusting Screw	1
28	2222001128	微調定位銷 Differential Feed Block	1
29	2222001129	彈簧 Spring	1
30	2222001130	墊圈 Washer	1
31	90ER040	E 形扣環	1
32	66800	油線 Oil Wick	1
33	2200001025	墊圈 Washer	1
34	90SW050	彈簧墊圈 Spring Washer	1
35	8MM05320809A	螺絲 Screw (CT1145 M5-0.8*8)	1
36	8MB06401108Q	螺樁 Stud (CT1146 M6-1*11)	1
37	2200001137	皿形墊圈 Disc Washer	1
38	2222001138	差動變換桿 Lever	1
39	2222001139	差動刻記板 Regulator Plate	1
40	8ME04282208A	螺絲 Screw (NCT1140 M4-0.7*22)	2
41	2222001141	隔環 Spacer	2
42	2200001142	止動環 Stopper	1
43	2200001147	螺帽 Nut	1
44	220A0001149	曲柄組 Lever Asm.	1
45	222A0001145	差動變換桿組 Lever Set	1
46	90OR070	O形油環 O Ring	1
47	222A0001147	承座組 Bracket Set	1
48	222A0001148	調節螺樁組 Adjusting Screw Set	1
49	220A0001154	曲柄組 Lever Set	1

12. CT9000 / CTD9000 / CTU9011 導針與送布齒驅動機構
Needle Guide And Feed Dog Driving For CT9000 / CTD9000 / CTU9011

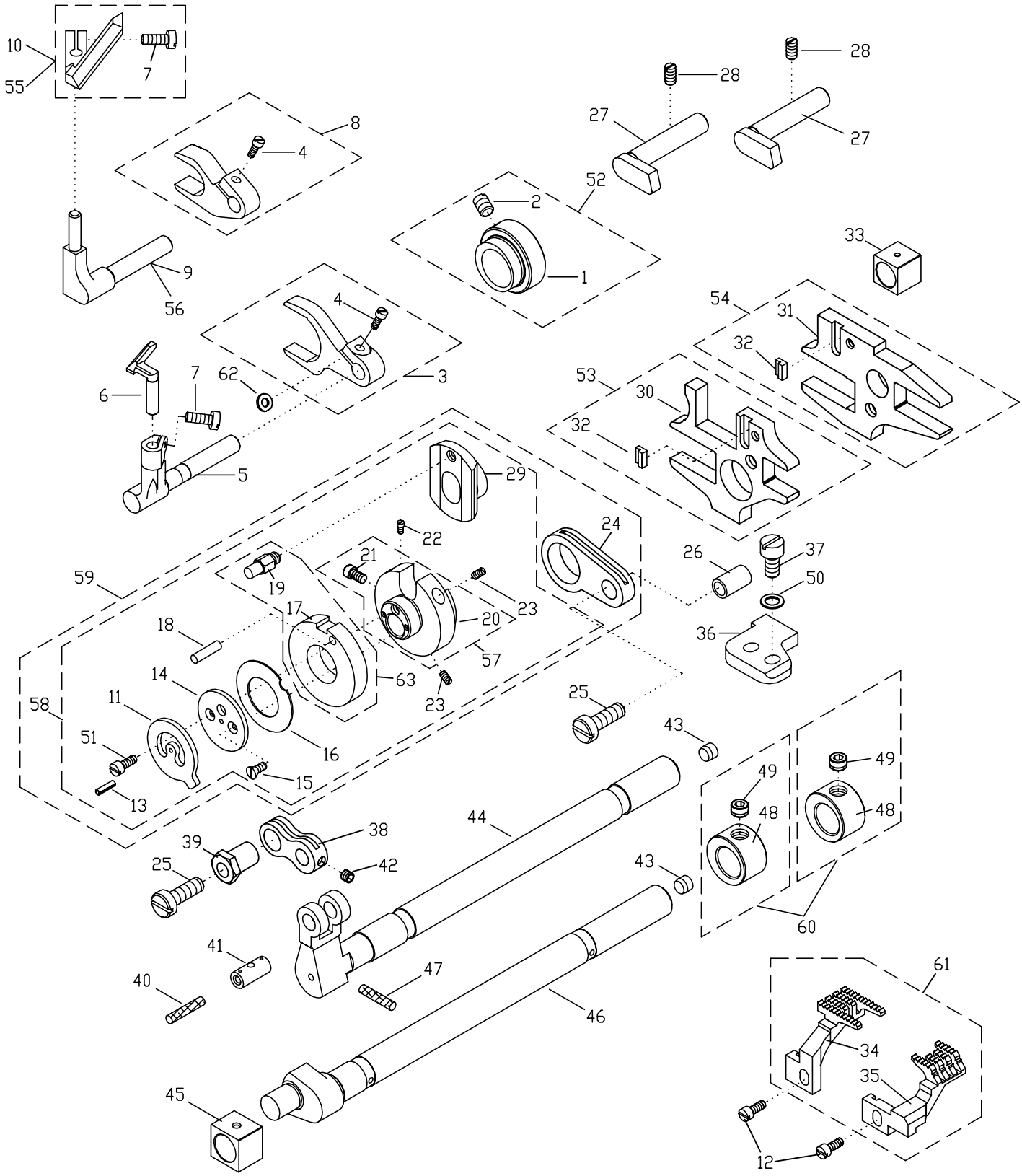

序號 Ref.No.	名稱 Description	針距 Distance Of Needles			
		4.0	4.8	5.6	6.4
34	主送布齒 Main Feed Dog	5220FD00563	5220FD00563	5220FD00563	5220FD00643
35	副送布齒 Diff Feed Dog	5220DF00560	5220DF00560	5220DF00560	5220DF00640
61	送布齒組 Feed Dog Asm.	5220DG0016	5220DG0016	5220DG0016	5220DG0017

12. CT9000 / CTD9000 / CTU9011 導針與送布齒驅動機構
Needle Guide And Feed Dog Driving For CT9000 / CTD9000 / CTU9011

序號 Ref.No.	物料編號 Parts No.	名稱 Description	單位用量 Amt.Req.
1	2200001201	導針擺動凸輪 Eccentric Cam	1
2	8MN05320500E	螺絲 Screw (CT0903 M5-0.8*5)	2
3	2200001203	導針擺動曲柄 Lever	1
4	8MB03201006A	螺絲 Screw (CT1204 M3-0.5*10)	2
5	2200001205	前導針座 Needle Guide Holder	1
6	5220NG00563	前導針器 Needle Guide	1
7	8MB03200606K	螺絲 Screw (CT1207 M3-0.5*6)	2
8	2200001208	導針擺動曲柄 Lever	1
9	2200001251	後導針座 Needle Guide Holder	1
10	5220NG00562	後導針器 Needle Guide	1
11	2200001211	限動片 Stopper	1
12	8MB85240806K	螺絲 Screw (CT0635 M3.5-0.6*8)	2
13	2200001027	彈簧銷 Spring Pin	1
14	2200001214	壓板 Presser	1
15	8ME02160404A	螺絲 Screw (CT0215 M2-0.4*4)	2
16	2200001216	緊迫簧片 Disc Spring	1
17	2200001217	變距凸輪 Cam	1
18	90SP0308	止動銷 Stopper Pin	1
19	2200001219	引動銷 Drive Pin	1
20	2200001220	變距滑道 Slide Guide	1
21	8MB85240605K	螺絲 Screw (CT1221 M3.5-0.6*6)	1
22	8MN03200300A	螺絲 Screw (CT0115 M3-0.5*3)	1
23	8MN04280600A	螺絲 Screw (CT1223 M4-0.7*6)	2
24	2200001224	連桿 Link	1
25	8MB05321809K	螺絲 Screw (CT1225 M5-0.8*17.8)	2
26	2200001226	連桿銷 Pin	1
27	2200001227	懸臂式滑軌 Guide	2
28	8MN06400600A	螺絲 Screw (CT0244 M6-1*6)	2
29	2200001229	變距滑塊 Slide Block	1
30	2200001230	主送齒驅動座 Feed Dog Seat	1
31	22000012311	副送齒驅動座 Feed Dog Seat	1
32	2200001232	送布齒定位鍵 Locator Key	2
33	2200001233	滑塊 Slide Block	1
34	----------	主送布齒 Main Feed Dog(See Left Page)	1
35	----------	副送布齒 Diff.Feed Dog(See Left Page)	1
36	2200001236	送齒座側導塊 Guide Block	1
37	8MB04281007K	螺絲 Screw(CT1237 M4-0.7*10)	2
38	2200001238	連桿 Link	1
39	2200001239	連桿銷 Pin	1
40	66800	油線 Oil Wick	1
41	2200001241	連桿銷 Pin	1
42	8MN03200400C	螺絲 Screw (CT1242 M3-0.5*4)	1
43	2200001243	孔塞 Plug	2
44	2200001244	曲柄 Shaft	1
45	2200001245	滑塊 Slide Block	1
46	2200001246	曲軸 Crank Shaft	1
47	66802	油線 Oil Wick	1
48	2200001248	定位環 Collar	2
49	8MN06400400A	螺絲 Screw (FT39-04-41 M6-1*4)	2
50	2100000223	墊圈 Washer	2
51	8MB85240807K	螺絲 Screw (FT0555 M3.5-0.6*8)	1
52	222A0001252	導針擺動凸輪組 Eccentric Cam Asm	1
53	222A0001253	主送齒驅動座組 Feed Dog Seat Asm	1
54	222A0001254	副送齒驅動座組 Feed Dog Seat Asm	1
*55	5220NG00561	後導針器 Needle Guide	1
*56	2200001209	後導針座 Needle Guide Holder	1
57	220A0001256	變距滑道組 Slide Guide Asm	1
58	220A0001254	變距滑道組 Slide Guide Asm	1
59	220A0001255	變距滑道組 Slide Guide Asm	1
60	220A0001252	定位環組 Collar Asm	2
61	----------	送布齒組 Feed Dog Asm. (See Left Page)	1
62	90PW030708	墊圈 Washe	1
63	220A0001263	變距凸輪組 Cam Set	1

*特註品 Custom-Item

13 .CTU9011 潤滑系統 Lubrication System For CTU9011

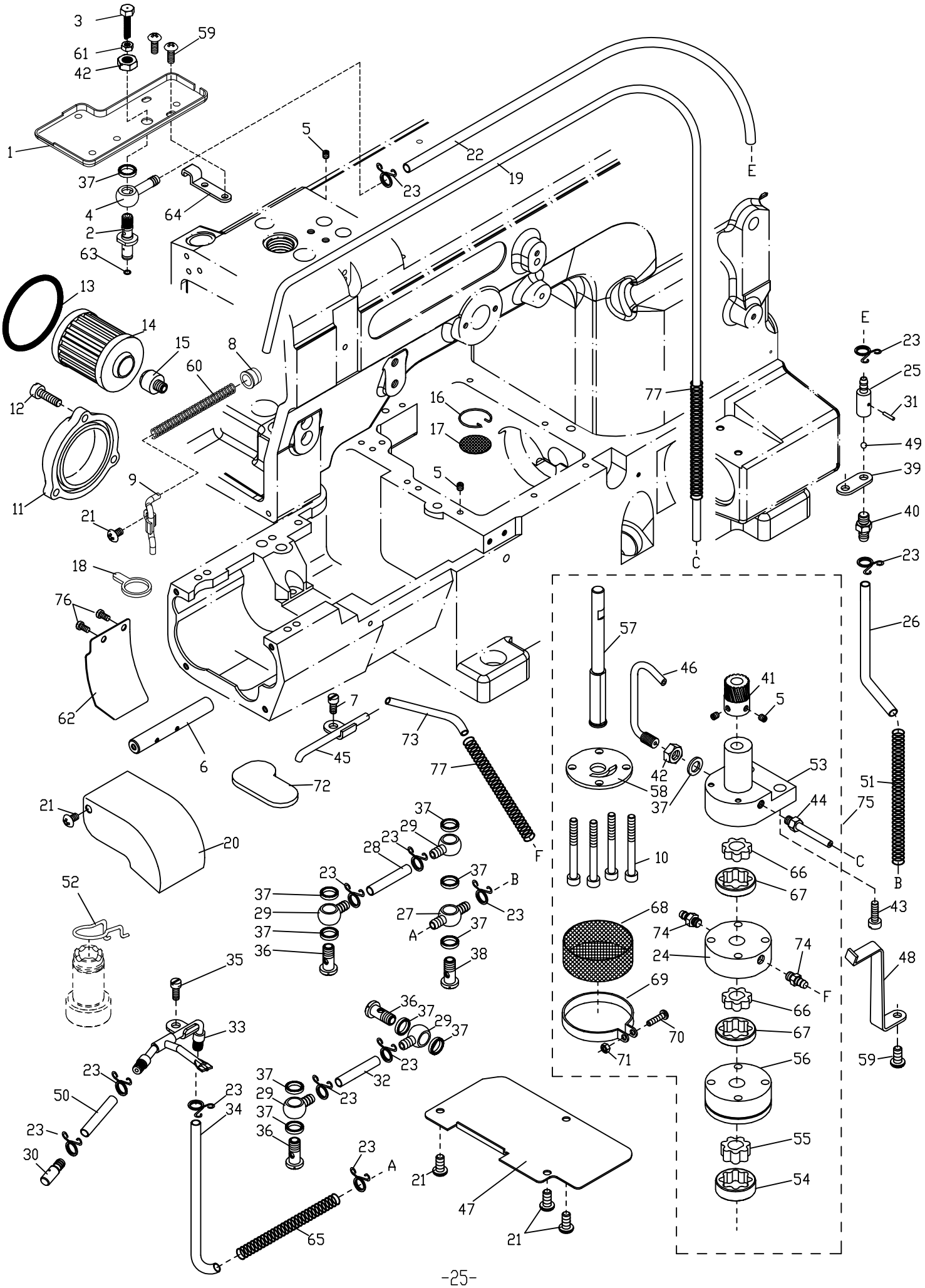

13. CTU9011 潤滑系統 Lubrication System For CTU9011

序號 Ref. No.	物料編號 Parts No.	名稱 Description	單位用量 Amt. Req.
1	2274111301	承油盤 Oil Receiver	1
2	2240001302	油管 Oil Tube	1
3	2240001303	噴油嘴 Nozzle	1
4	2240001304	油管接頭 Oil Tube Joint	1
5	8MN04280400A	螺絲 Screw(CT0229 M4-0.7*4)	4
6	2210001352	軸 Shaft	1
7	8MB04280608A	螺絲 Screw (UTB0130 M4-0.7*6)	1
8	2274111308	孔塞 Plug	1
9	2274111309	油管 Oil Tube	1
10	8MM04284007B	螺絲 Screw (CT1310 M4-0.7*40)	4
11	2200001311	封蓋 Oil Filter Cover	1
12	8MB04281207K	螺絲 Screw (CT0239 M4-0.7*12)	3
13	2200001313	O 形油環 O Ring	1
14	2100001521	過濾器 Oil Filter	1
15	2200001315	過濾器接頭 Oil Filter Joint	1
16	2200001316	扣簧 Filter Screen Clamp	1
17	2200001317	網板 Filter Screen	1
18	22741113182	羊毛氈 Felt	1
19	66790	油管 Oil Tube (⌀2.9 * ⌀5 * 410 L)	1
20	2210001354	防油蓋 Cover	1
21	8MC04280507D	螺絲 Screw (CT0122 M4-0.7*5)	5
22	66792	油管 Oil Tube (⌀4.6 * ⌀6.3 * 410 L)	1
23	2100001536	夾簧 Latch Spring	12
24	2220001324	壓出泵 Rotor Case	1
25	2220001325	單向閥 One Way Valve	1
26	66792	油管 Oil Tube (⌀4.6 * ⌀6.3 * 110 L)	1
27	2200001327	油管接頭 Oil Tube Joint	1
28	66792	油管 Oil Tube (⌀4.6 * ⌀6.3 * 35 L)	1
29	2100001535	油管接頭 Oil Tube Joint	4
30	2200001330	噴油嘴 Nozzle	1
31	2220001331	銷 Pin	1
32	66792	油管 Oil Tube (⌀4.6 * ⌀6.3 * 30 L)	1
33	22000013331	油管 Oil Tube	1
34	66792	油管 Oil Tube (⌀4.6 * ⌀6.3 * 105 L)	1
35	8MB04280807K	螺絲 Screw (CT0215 M4-0.7*8)	1
36	2100001533	螺樁 Stud	3
37	2100001534	墊圈 Washer	11
38	2200001338	螺樁 Stud	1
39	2220001339	止回閥座 Bracket	1
40	2220001340	油嘴 Oil Tube Joint	1

13 .CTU9011 潤滑系統 Lubrication System For CTU9011

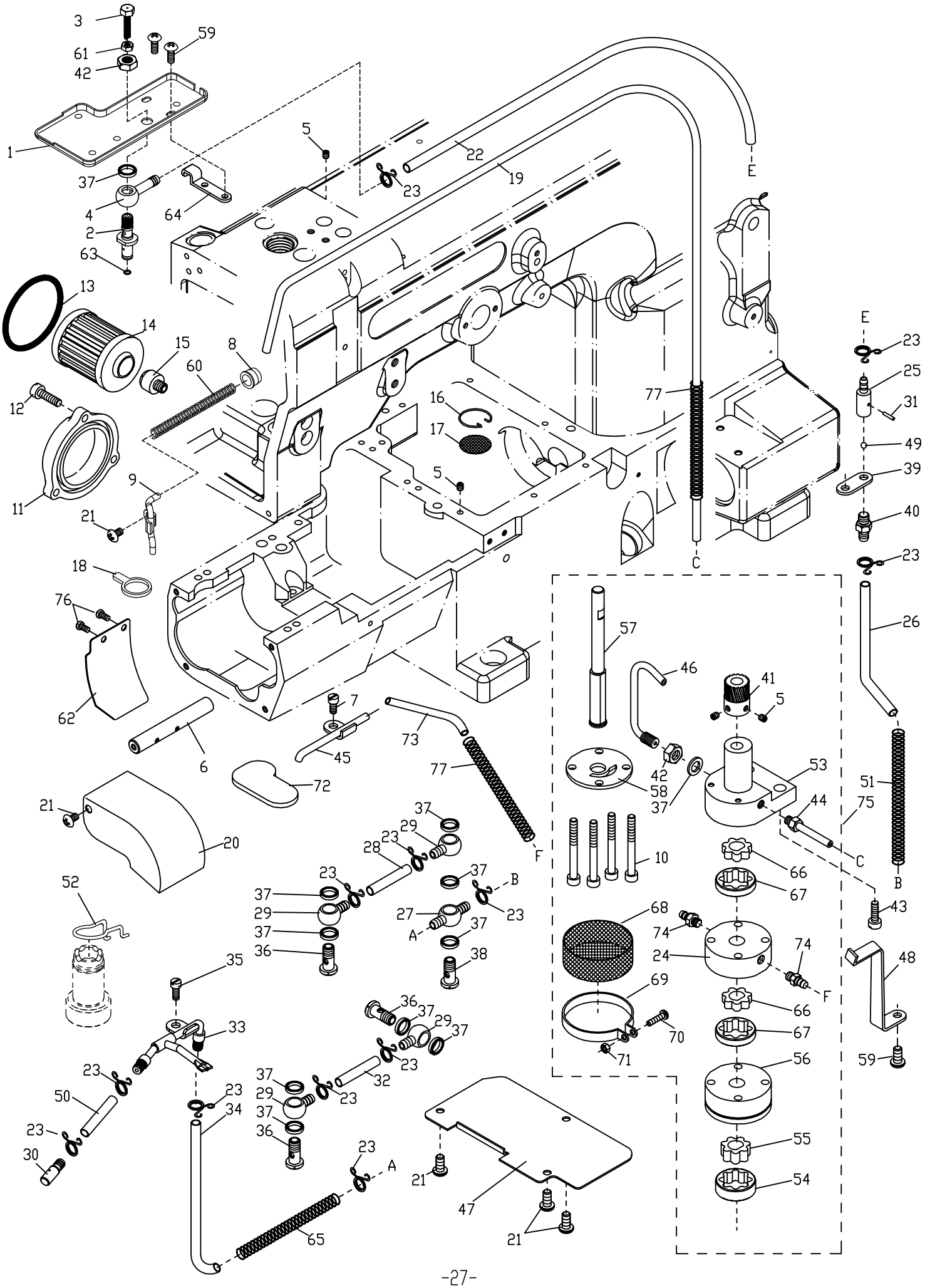

13. CTU9011 潤滑系統 Lubrication System For CTU9011

序號 Ref. No.	物料編號 Parts No.	名稱 Description	單位用量 Amt. Req.
41	2200001341	螺母 Worm Gear	1
42	8MA06400510A	螺帽 Nut (CT0533 M6-1*5)	2
43	8MM06402010A	螺絲 Screw (SH04-44 M6-1*20)	2
44	2200001344	油管 Oil Tube	1
45	2220001345	油管 Oil Tube	1
46	22200013461	噴油嘴 Nozzle	1
47	2220001347	隔板 Separate	1
48	2220001348	油管支持臂 Oil Tube Holder	1
49	2220001349	鋼珠 Steel ball	1
50	66792	油管 Oil Tube (⌀4.6 * ⌀6.3 * 37 L)	1
51	2270001377	彈簧 Spring	1
52	2270001352	壓簧 Spring Latch	1
53	22200013531	回收泵 Pump Body	1
54	2200001354	外轉子 Outside Rotor	1
55	2200001355	內轉子 Inside Rotor	1
56	2200001356	壓出泵 Rotor Case	1
57	22200013571	軸 Shaft	1
58	2200001358	封蓋 Cover	1
59	8MC04280807D	螺絲 Screw (CT0130 M4-0.7*8)	3
60	2274111360	彈簧 Spring	1
61	8MA85240306B	螺帽 Nut (FT020112 M3.5-0.6*2.8)	1
62	2210001353	防油蓋 Cover	1
63	90OR030	油環 Oil Rin	1
64	22400013051	檔片 Washer	1
65	2260001380	彈簧 Spring	1
66	2220001366	內轉子 Inside Rotor	2
67	2220001367	外轉子 Outside Rotor	2
68	2220001368	油網 Oil Mesh	1
69	2220001369	夾簧 Latch Spring	1
70	8MC03201306D	螺絲 Screw (UTB0335 M3-0.5*12.5)	1
71	8MA03200306A	螺帽 Nut(FTB0111 M3-0.5*3)	1
72	2220001372	羊毛氈 Felt	1
73	66790	油管 Oil Tube (⌀2.9 * ⌀5 * 520 L)	1
74	2220001374	油嘴 Nozzle	2
75	227A0001375	泵組 Pump Asm	1
76	8MB03200506K	螺絲 Screw (CT0525 M3-0.5*5)	2
77	22700013781	彈簧 Spring	2

14. CTU9011 / CTU9711 / FTU7011 / CXU2000 / CXN2000

上送機構 Top Feed Mechanism

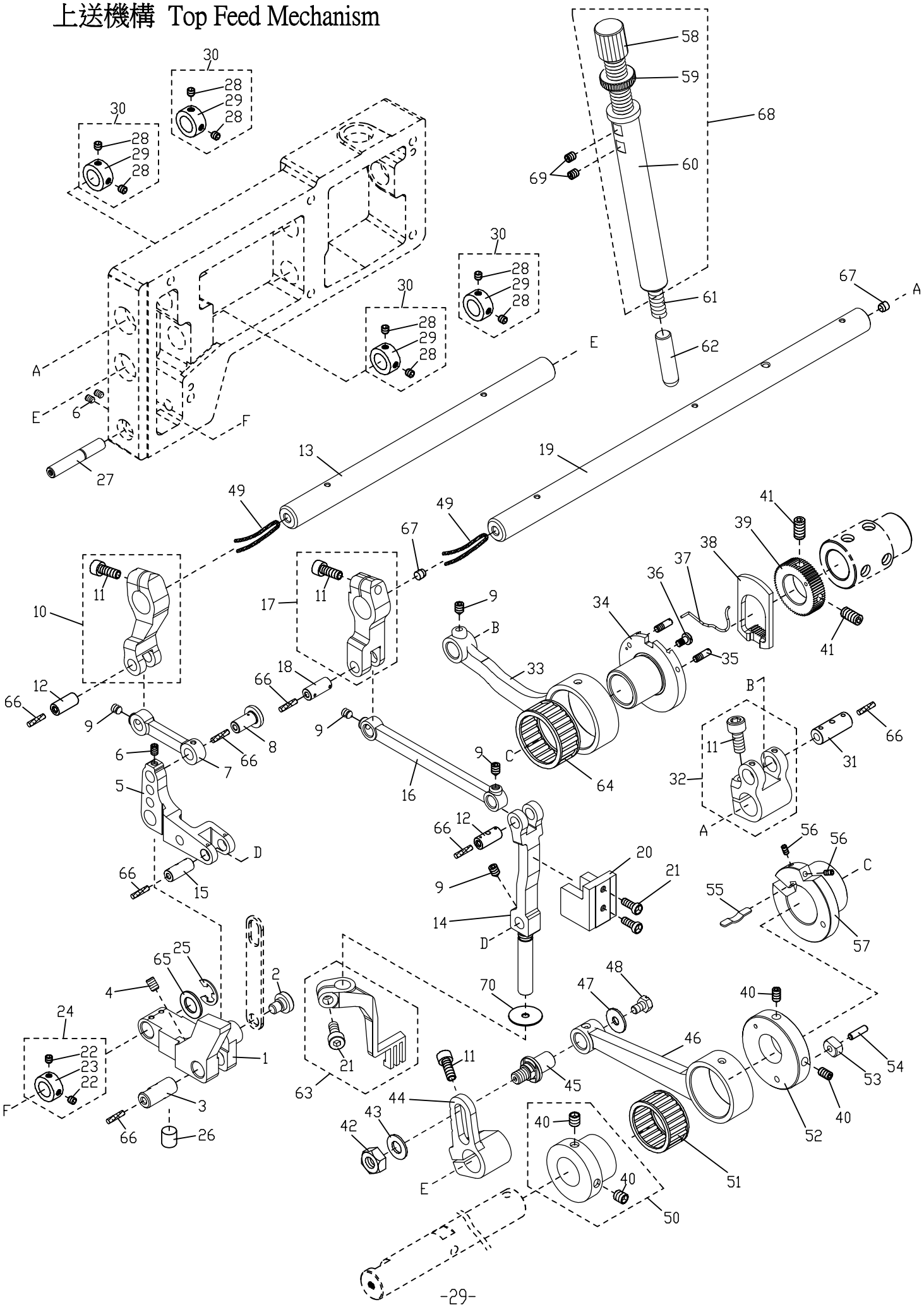

14. CTU9011 / CTU9711 / FTU7011 / CXU2000 / CXN2000

上送機構 Top Feed Mechanism

序號 Ref.No.	物料編號 Parts No.	名稱 Description	單位用量 Amt.Req.
1	2274111401	上送布齒棒承座 Top Feed Dog Bar Bracket	1
2	8MB05320509G	螺樁 Stud (CT0802 M5-0.8*5)	1
3	2274111403	連桿銷 Pin	1
4	8MN04280600A	螺絲 Screw (CT1223 M4-0.7*6)	1
5	2274111405	曲柄 Lever	1
6	8MN04280400A	螺絲 Screw (CT0229 M4-0.7*4)	3
7	2274111407	連桿 Link	1
8	2274111408	連桿銷 Pin	1
9	8MN04280500C	螺絲 Screw (FT1222 M4-0.7*5)	5
10	2274111410	連桿 Link	1
11	8MM05321409A	螺絲 Screw (CT0632 M5-0.8*14)	4
12	2200001241	連桿銷 Pin	2
13	2274111413	軸 Shaft	1
14	22741114142	連桿 Link	1
15	2274111415	連桿銷 Pin	1
16	2274111416	連桿 Link	1
17	2274111417	連桿 Link	1
18	2274111418	連桿銷 Pin	1
19	2274111419	軸 Shaft	1
20	2274111420	滑道 Guide Block	1
21	8MM04280907A	螺絲 Screw (UH0171 M4-0.7*9)	3
22	8MN03200300A	螺絲 Screw (C0115 M3-0.5*3)	2
23	2210000534	定位環 Collar	1
24	221A0000563	定位環組 Collar Asm. (F0534A)	1
25	90ER060	E形扣環 E-Ring	1
26	2274111426	止動環 Stopper	1
27	2274111427	軸 Shaft	1
28	8MN95300600A	螺絲 Screw (FT1025 M4.5-0.75*6)	8
29	2200000912	定位環 Collar	4
30	227411A1430	定位環 Collar	4
31	2274111431	連桿銷 Pin	1
32	2274111432	曲柄 Lever	1
33	2274111433	連桿 Link	1
34	2274111434	變距偏心輪 Eccentric	1
35	8MB03200403C	螺絲 Screw (MT0844 M3-0.5*4)	2
36	8MB03200606B	螺絲 Screw (MT0851 M3-0.5*3)	1
37	23100008211	彈簧 Spring	1
38	2274111438	離合齒片 Regulating Plate	1
39	2274111439	離合齒輪 Regulating Gear	1
40	8MN05320600A	螺絲 Screw (MT0729 M5-0.8*6)	4
41	8MN05321000E	螺絲 Screw (MT0843 M5-0.8*10)	2
42	8MA06400510A	螺帽 Nut (CT0533 M6-1*5)	1
43	2200000910	墊圈 Washer	1
44	2274111444	變距曲柄 Lever	1
45	2274111445	曲柄銷 Rod Pin	1
46	2274111446	連桿 Link	1
47	2200000908	墊圈 Washer	1
48	8MK04280707A	螺絲 Screw (UT12A-01-26 M4-0.7*7)	1
49	66800	油線 Oil Wick	2
50	2274111450	偏心輪 Eccentric	1
51	90NB222613	滾針軸承 Needle Bearing	1
52	2274111452	變距銷座 Eccentric Collar	1
53	2274111453	變距銷 Pin	1
54	90ST0312	定位銷 Knock Pin	1
55	2274111455	簧片 Connection	1
56	8MN03200500A	螺絲 Screw (STB0116 M3-0.5*5)	2
57	2274111457	進給偏心輪 Eccentric	1
58	2274111458	壓力調整螺樁 Spring Regulator	1
59	2274111459	螺帽 Nut	1
60	2274111460	上送布齒棒 Top Feed Dog Bar	1
61	2274111461	彈簧 Spring	1
62	2274111462	套管 Clutch Sleeve	1
63	5227DGT00560	上送布齒 Top Feed Dog	1
64	90NB263013	滾針軸承 Needle Bearing	1
65	2200000716	墊圈 Washer	1
66	66801	油線 Oil Wick	7
67	2200001029	孔塞 Plug	2
68	227411A1468	上送布齒棒組 Top Feed Dog Bar Asm.	1
69	8MN05320500A	螺絲 Screw (EF0144 M5-0.8*5)	2
70	2274111470	阻油片 Oil Separator	1

15. CTD9000 / CTU9011 / CXM2000 / CXM2500 / CXM4000 / CXU2000 CXU2500 / CXU4000 裝載附件 Supporting Board

上載式

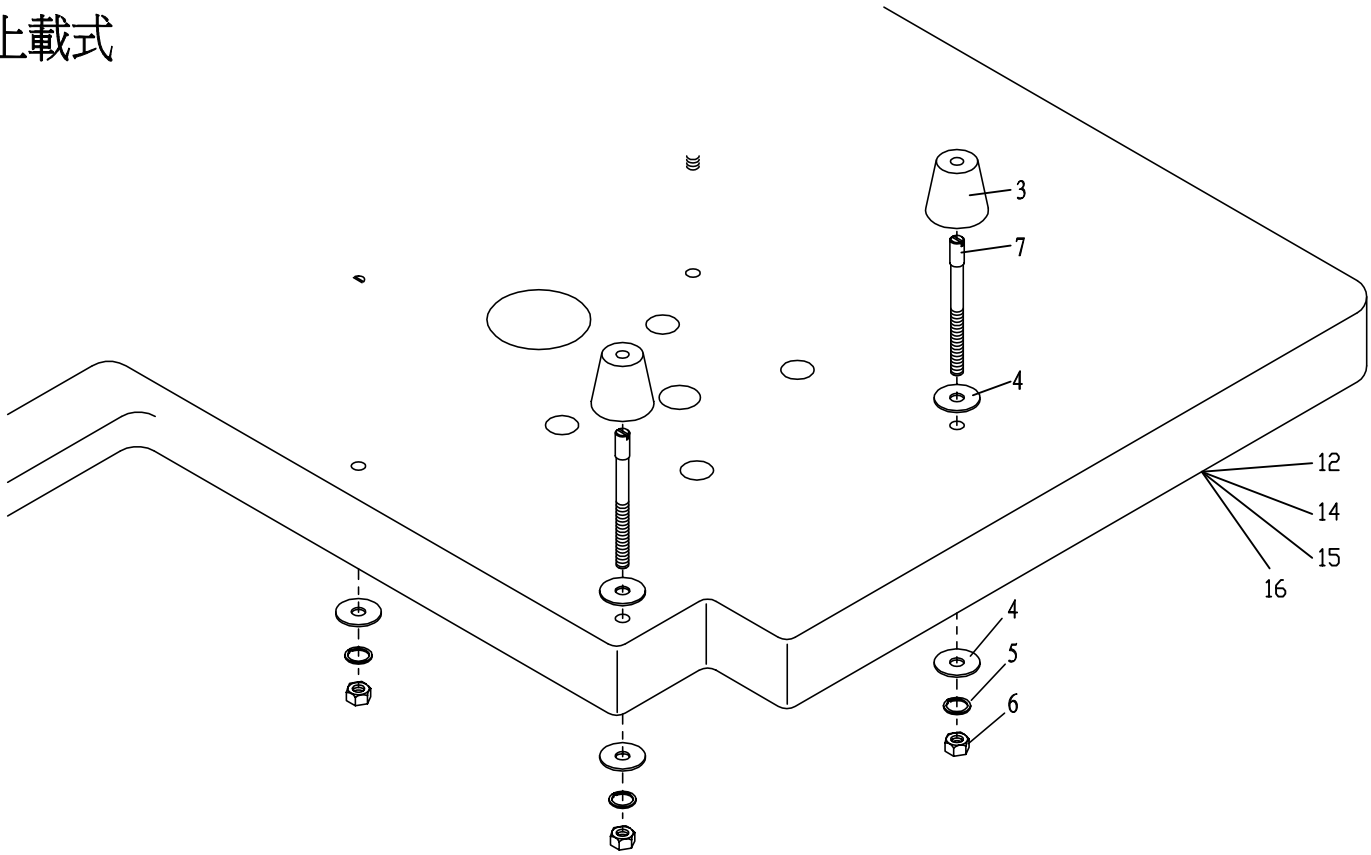

半沉式

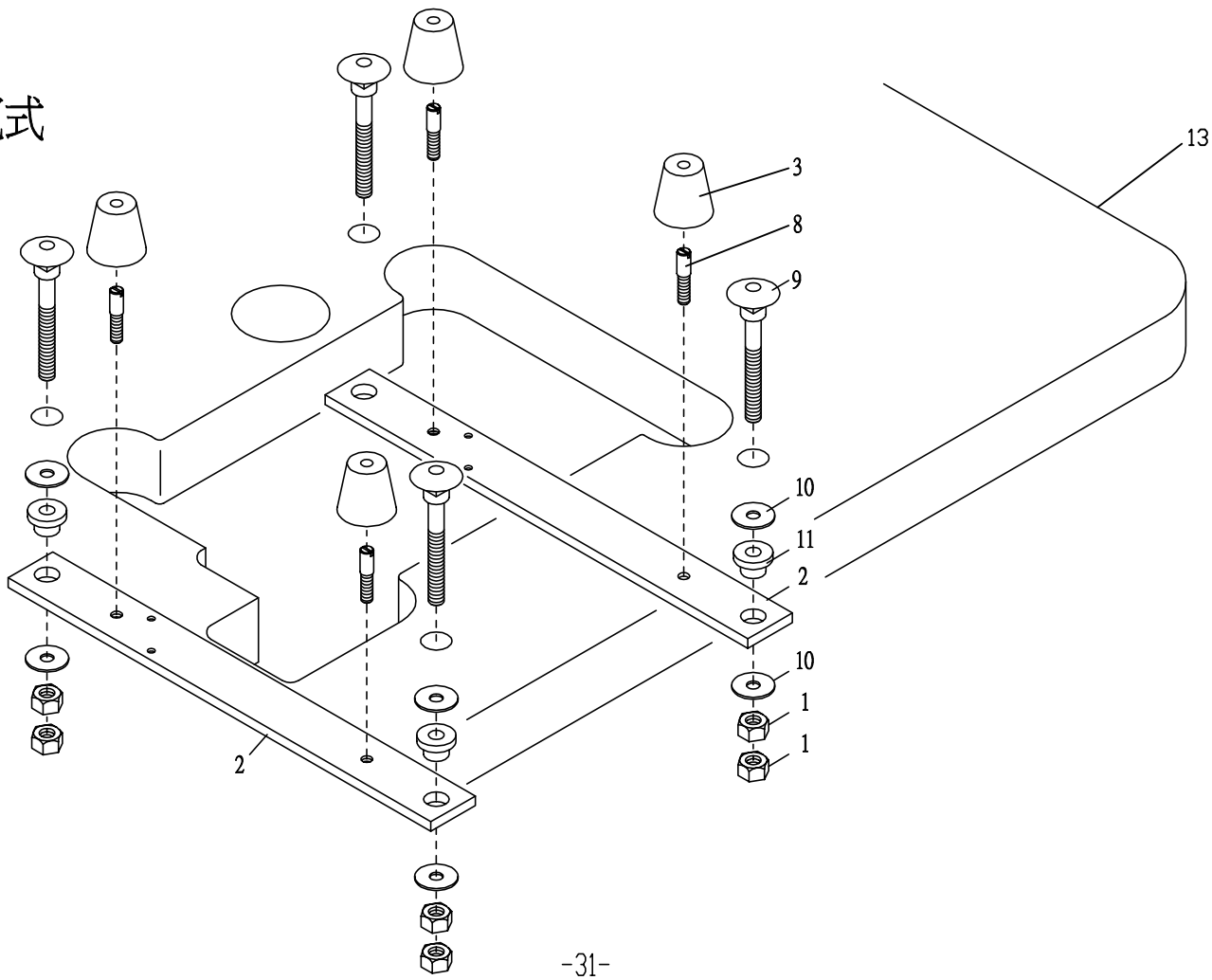

15. CTD9000 / CTU9011 / CXM2000 / CXM2500 / CXM4000 CXU2000 / CXU2500 / CXU4000 裝載附件 Supporting Board

序號 Ref.No.	物料編號 Parts No.	名稱 Description	單位用量 Amt. Req.
*1	8SA79180613A	螺帽 Nut (CT1514 5/16"-18*6)	8
2	2200001512	車頭承板 Supporting Board	2
*3	66943	減震橡膠 Rubber Cushion	4
*4	2200001504	墊圈 Washer	8
*5	90SW070	彈簧墊圈 Spring Wahsher	4
*6	8MA06400612A	螺帽 Nut (SH0242 M6-1*6)	4
*7	8MB06406507B	螺樁 Bolt (CT1507 M6-1*65)	4
*8	8MB06401607M	螺樁 Stud (CT1503 M6-1*16)	4
*9	8SC79187827B	懸吊螺樁 Bolt	4
*10	2200001510	墊圈 Washer	8
*11	2200001511	橡膠環 Rubber Washer	4
12	66811-9	CTD9000/CTD9085/CTD9311/CTD9711/CTD9811/CXM2000/CXM2500/ CXM4000/CXM2311/CXM4311/CXU2000/CXU2500/CXU4000/CXU2311 CXU4311上載式開口型車板Open-cut Table Top Type	-
13	66811-10	CTD9000/CXM2000/CXM2500/CXM4000/CXM2311/CXM4311/CXU2000 CXU2500/CXU4000/CXU2311/CXU4311半沉式車板 Semi-submerged Type	-
14	66811-13	CTD9000/CTD9711/CXM2000/CXM2500/CXM4000/CXU2000/CXU2500 CXU4000上載式車板 Standard Table Top Type	-
15	66811-15	CTD9042 上載式開口型車板 Open-cut Table Top Type	-
16	66811-20	CXM2311/CXM4311/CXU2311/CXU4311 上載式車板 Standard Table Top Type	-
17	220A0001519	桌板螺絲包 Table Screw Package	1

* : 代表桌板螺絲包內的零件

16. CTU9011 / CTU9711 / CXU2000 / CXN2000 工具及附件 Accesseries

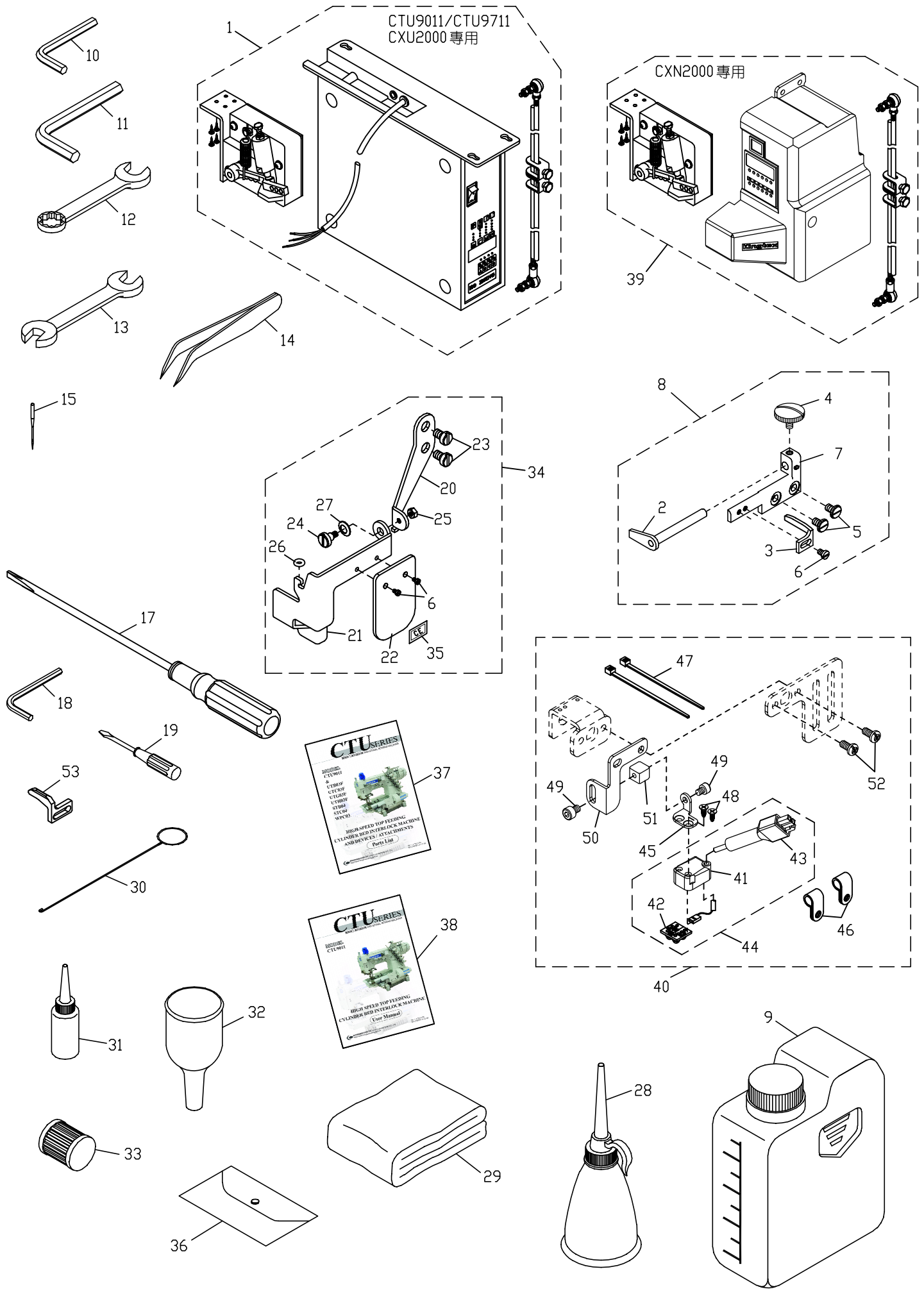

16. CTU9011 / CTU9711 / CXU2000 / CXN2000 工具及附件 Accesseries

序號 Ref.No.	物料編號 Parts No.	名稱 Description	單位用量 Amt.Req.
*1	----------	控制箱組 Control Box Asm.	1
2	4EG0050102	導模 Fabric Guide	1
3	4EG00501031	導模 Fabric Guide	1
4	4EG0050104	螺樁 Stud	1
5	8MB04280608A	螺絲 Screw (UTB0130 M4-0.7*6)	2
6	8MB03200405A	螺絲 Screw (FT0548 M3-0.5*4)	3
7	4EG0050101	擋塊 Plate	1
** 8	/EG005	導模組 Fabric Guide Asm.	1
9	66715	油罐 Oil Container	1
10	66636	六角扳手 Spanner 3MM	1
11	66637	六角扳手 Spanner 4MM	1
12	66612	梅花扳手 Wrench 10MM	1
13	66613	開口扳手 Wrench 7/8MM	1
14	66690	鑷子 Tweezer	1
15	66725-11-5	備用針 Retainer Needle	1
16	----------	----------	-
17	66671	木柄一字起子 Wooden Handle Flat Screw Driver	1
18	66639	六角板手 Spanner 1.5MM	1
19	66667	小起子 Screw Driver (Small)	1
20	2200001620	護目鏡座 Safety Plate Support	1
21	2274111621	護目鏡架 Safety Plate Holder	1
22	2200001622	護目鏡 Safety Plate	1
23	8MC06401008E	螺絲 Screw (CT0832 M6-1*9.5)	2
24	8SB36400810E	螺絲 Screw (CT1624 9/64"-40*8)	1
25	8SA36400306A	螺帽 Nut (K09-09 9/64"-40*3)	1
26	90OR030	油環 Oil Rin	1
27	2200000228	墊圈 Washer	1
28	66721	油壺 Oiler	1
29	66848	防塵罩 Mechine Cover	1
30	66840	穿線鋼絲 Threading Bar	1
31	66720	矽油 Silicon Oil	1
32	66722	漏斗 Oil Funnel	1
33	2100001521	過濾器 Oil Filter	1
34	227411A1632	護目鏡組 Safety Plate Asm.	1
35	66451	貼紙 Paster	1
36	66831	工具袋 Bag	1
37	----------	零件冊 Parts List	1
38	----------	使用說明書 Instruction Manual	1
△39	----------	CXN2000 控制箱組 I60x-4-K1-220 Control Box Asm.	1
40	/TL008	燈組 LED Light Asm.	-
41	2240001602	燈座 Light holder bracket	1
42	2240001603	燈 LED light	1
43	2240001604	電源線 Power connector	1
◎44	224A0001605	燈組 Light Asm.	1
45	2240001606	支架 Holder Bracket	1
46	4UTD000254	線夾 Cord Clamp	2
47	4UTB020306	束線 Plastic Binding Wire	2
48	8TE03440806A	螺絲 Screw	2
49	8MM04280507A	螺絲 Screw (UH0172 M4-0.7*5)	2
50	4TL00201011	支架 Holder Bracket	1
51	4TL0020102	活動塊 Movable Block	1
52	8MC04280807D	螺絲 Screw (C0130 M4-0.7*8)	2
▲53	2260001634	左導模 Fabric Guide (L)	1

* 控制箱種類依馬達及電、氣切線裝置購買
** 為 CTU9011 / CXU2000 / CXN2000 用
◎ 需整組購買 Must be soid in complete set
△ CXN2000 專用 (控制箱種類依馬達及電、氣切線裝置購買)
▲為 CTU9711 用

機型 \ 項次	37	38
	零件冊	使用說明書
CTU9011	6CT6300-2K-12-06	6CT62M0-E-12-06
CTU9711	6CT6300-2R-14-06	6CT62M0-J-14-06
CXU2000/CXN2000	6CXU63OA-4-15-07	6CXU62MA-04-15-07

項次 \ 機型	CTU9011 / CTU9711 CXU2000	CXN2000
40	選配品	標配品

17. 66707 線架 Thread Stand 66707

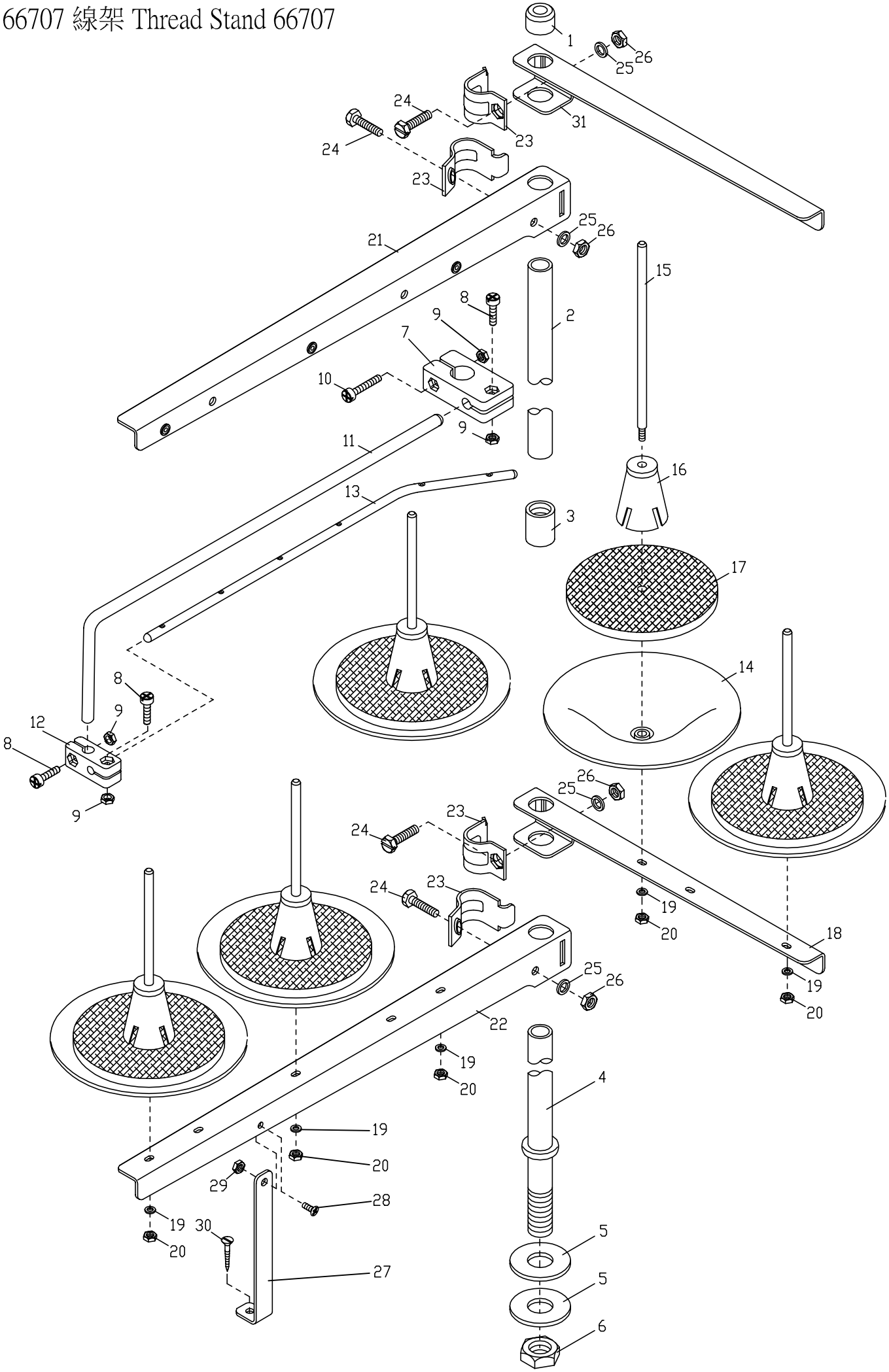

17. 66707 線架 Thread Stand 66707

序號 Ref.No.	物料編號 Parts No.	名稱 Description	單位用量 Amt. Req.
1	667051	柱帽 Rod Cup	1
2	667052	上柱 Upper Thread Stand Rod	1
3	667053	接頭 Joint	1
4	667054	下柱 Lower Thread Stand Rod	1
5	667055	墊圈 Washer	2
6	667056	螺帽 Nut	1
7	667057	接頭 Bracket	1
8	667058	螺絲 Screw	3
9	667059	螺帽 Nut	4
10	6670510	螺絲 Screw	1
11	6670511	旋臂 Arm	1
12	6670512	接頭 Bracket	1
13	6670513	導線桿 Thread Guide	1
14	6670514	線盤 Spool Set for SH6005	5
15	6670515	線盤軸 Spool Pin	5
16	6670516	定心錐 Spool Retaining Fig	5
17	6670517	緩衝墊 Seat	5
18	667061	線盤座 Spool Set Bracket	1
19	6670519	彈簧墊圈 Spring Washer	5
20	6670520	螺帽 Nut	5
21	6670521	導線臂 Thread Guide	1
22	6670522	線盤座 Spool Set Bracket	1
23	6670523	夾板 Clamp	4
24	6670524	螺絲 Screw	4
25	6670525	彈簧墊圈 Spring Washer	4
26	6670526	螺帽 Nut	4
27	6670527	撐桿 Support Rod	1
28	6670528	螺絲 Screw	1
29	6670529	螺帽 Nut	1
30	6670530	木螺絲 Wood Screw	1
31	6670531	導線 Thread Guide	1

CTU9000/CTU9011 GAUGE PARTS LIST

CTU9000-0-0□□□M
CTU9000-0-□□□M

針數 Needle	針距 m.m	Throat plate 針鈑	Presser foot asm 壓腳	Main feed dog 主送布齒	Diff feed dog 副送布齒	Top feed dog 上送布齒	Needle clamp 針留	Upper looper 上結線鉤	Lower looper 下結線鉤	Needle guide 前導針	Needle guide 後導針	Needle 針
3	5.6	5220TP00564	5227PFT00561	5220FD00563	5220DF00560	5227DGT00561	5227NC00560	5227SLT00560	5220LL00560	5220NG00563	5220NG00562	UY128GAS # 11
				5220DG0016								
3	6.4	5220TP00642	5227PFT00641	5220FD00643	5220DF00640		5227NC00640					
				5220DG0017								

CTU9011-0-0 □□□M
CTU9011-0- □□□M

針數 Needle	針距 m.m	Throat plate 針鈑	Presser foot asm 壓腳	Main feed dog 主送布齒	Diff feed dog 副送布齒	Top feed dog 上送布齒	Needle clamp 針留	Upper looper 上結線鉤	Lower looper 下結線鉤	Needle guide 前導針	Needle guide 後導針	Needle 針
2	4.0	5222TP00401	5227PFT00402	5220FD00563	5220DF00560	5227DGT00560	5220NC00400	5227SLT00560	5220LL00560	5220NG00563	5220NG00562	UY128GAS # 11
				5220DG0016								
3	4.8	5220TP00484	5227PFT00482	5220FD00563	5220DF00560		5220NC00485					
				5220DG0016								
3	5.6	5220TP00564	5227PFT00562	5220FD00563	5220DF00560		5227NC00560					
				5220DG0016								
3	6.4	5220TP00642	5227PFT00642	5220FD00643	5220DF00640		5227NC00640					
				5220DG0017								

CTU9011 GAUGE PARTS LIST

CTU9011-0-0 □□□H
CTU9011-0- □□□H

針數 Needle	針距 m.m	Throat plate 針鈑	Presser foot asm 壓腳	Main feed dog 主送布齒	Diff feed dog 副送布齒	Top feed dog 上送布齒	Needle clamp 針留	Upper looper 上結線鉤	Lower looper 下結線鉤	Needle guide 前導針	Needle guide 後導針	Needle 針
2	4.0	5222TP00400	5227PFT00402	5220FD00563	5220DF00560	5227DGT00560	5220NC00400	5227SLT00560	5220LL00560	5220NG00563	5220NG00562	UY128GAS # 14
				5220DG0016								
3	4.8	5222TP00480	5227PFT00482	5220FD00563	5220DF00560		5220NC00485					
				5220DG0016								
3	5.6	5220TP00566	5227PFT00562	5220FD00563	5220DF00560		5227NC00560					
				5220DG0016								
3	6.4	5220TP00644	5227PFT00642	5220FD00643	5220DF00640		5227NC00640					
				5220DG0017								

CTU9011-0-0 □□□W
CTU9011-0- □□□W

針數 Needle	針距 m.m	Throat plate 針鈑	Presser foot asm 壓腳	Main feed dog 主送布齒	Diff feed dog 副送布齒	Top feed dog 上送布齒	Needle clamp 針留	Upper looper 上結線鉤	Lower looper 下結線鉤	Needle guide 前導針	Needle guide 後導針	Needle 針
3	5.6	5220TP00568	5227PFT00562	5220FD00563	5220DF00560	5227DGT00560	5227NC00560	5227SLT00560	5220LL00560	5220NG00563	5220NG00562	UY128GAS # 11
				5220DG0016								
3	6.4	5220TP00646	5227PFT00642	5220FD00643	5220DF00640		5227NC00640					
				5220DG0017								

CTU9011 GAUGE PARTS LIST

CTU9011-0-0 □□□L
CTU9011-0- □□□L

針數 Needle	針距 m.m	Throat plate 針鈑	Presser foot asm 壓腳	Main feed dog 主送布齒	Diff feed dog 副送布齒	Top feed dog 上送布齒	Needle clamp 針留	Upper looper 上結線鉤	Lower looper 下結線鉤	Needle guide 前導針	Needle guide 後導針	Needle 針
2	4.0	5222TP00402	5227PFT00402	5220FD00563	5220DF00560	5227DGT00560	5220NC00400	5227SLT00560	5220LL00560	5220NG00563	5220NG00562	UY128GAS # 11
				5220DG0016								
3	4.8	5222TP00481	5227PFT00482	5220FD00563	5220DF00560		5220NC00485					
				5220DG0016								
3	5.6	5222TP00560	5227PFT00562	5220FD00563	5220DF00560		5227NC00560					
				5220DG0016								
3	6.4	5222TP00640	5227PFT00642	5220FD00643	5220DF00640		5227NC00640					
				5220DG0017								

CTU9011-0-0 □□□S
CTU9011-0- □□□S

針數 Needle	針距 m.m	Throat plate 針鈑	Stitch plate Tongue 針鈑舌	Presser foot asm 壓腳	Main feed dog 主送布齒	Diff feed dog 副送布齒	Aux feed dog 輔助送布齒	Top feed dog 上送布齒	Needle clamp 針留	Upper looper 上結線鉤	Lower looper 下結線鉤	Needle guide 前導針	Needle guide 後導針	Needle 針
2	4.0	5222TP0056B	5222TPL140A	5227PFT00402	5222FD00560	5222DF00560	5222AF00560	5227DGT00560	5220NC00400	5227SLT00560	5220LL00560	5220NG00563	5220NG00562	UY128GAS # 11
		5222TP00403			5222DG0010									
3	4.8	5222TP0056B	5222TPL148A	5227PFT00482	5222FD00560	5222DF00560	5222AF00560		5220NC00485					
		5222TP00483			5222DG0010									
3	5.6	5222TP0056B	5222TPL156A	5227PFT00562	5222FD00560	5222DF00560	5222AF00560		5227NC00560					
		5222TP00563			5222DG0010									
3	6.4	5222TP0056B	5222TPL164A	5227PFT00642	5222FD00560	5222DF00560	5222AF00560		5227NC00640					
		5222TP00643			5222DG0010									

CTU9011/CTU9013 GAUGE PARTS LIST

CTU9011-0-0 □□□S1
CTU9011-0- □□□S1

針數 Needle	針距 m.m	Throat plate 針鈑	Stitch plate Tongue 針鈑舌	Presser foot asm 壓腳	Main feed dog 主送布齒	Diff feed dog 副送布齒	Aux feed dog 輔助送布齒	Top feed dog 上送布齒	Needle clamp 針留	Upper looper 上結線鉤	Lower looper 下結線鉤	Needle guide 前導針	Needle guide 後導針	Needle 針
2	4.0	5227TP0056B 5227TP00403	5222TPL140C	5227PFT00402	5222FD00560	5222DF00560	5222AF00560 5222DG0010	5227DGT00560	5220NC00400	5227SLT00560	5220LL00560	5220NG00563	5220NG00562	UY128GAS # 11
3	4.8	5227TP0056B 5227TP00483	5222TPL148C	5227PFT00482	5222FD00560	5222DF00560	5222AF00560 5222DG0010		5220NC00485					
3	5.6	5227TP0056B 5227TP00563	5222TPL156C	5227PFT00562	5222FD00560	5222DF00560	5222AF00560 5222DG0010		5227NC00560					
3	6.4	5227TP0056B 5227TP00643	5222TPL164C	5227PFT00642	5222FD00560	5222DF00560	5222AF00560 5222DG0010		5227NC00640					

CTU9013-0-□□□M

針數 Needle	針距 m.m	Throat plate 針鈑	Presser foot asm 壓腳	Main feed dog 主送布齒	Diff feed dog 副送布齒	Aux feed dog 輔助送布齒	Top feed dog 上送布齒	Needle clamp 針留	Upper looper 上結線鉤	Lower looper 下結線鉤	Needle guide 前導針	Needle guide 後導針	Needle 針
3	5.6	5222TP13563	5227PFT00561	5220FD00563	5220DF13563	5220AF13560 5222DG0001	5227DGT00561	5227NC00560	5227SLT00560	5220LL00560	5220NG00563	5220NG00562	UY128GAS # 11
3	6.4	5222TP13643	5227PFT00641	5220FD00643	5220DF13643	5220AF13640 5222DG0002		5227NC00640					

CTU9013 GAUGE PARTS LIST

CTU9013-1-□□□M

針數 Needle	針距 m.m	Throat plate 針鈑	Presser foot asm 壓腳	Main feed dog 主送布齒	Diff feed dog 副送布齒	Aux feed dog 輔助送布齒	Top feed dog 上送布齒	Needle clamp 針留	Upper looper 上結線鉤	Lower looper 下結線鉤	Needle guide 前導針	Needle guide 後導針	Needle 針
3	5.6	5222TP13564	5227PFT00561	5220FD00563	5220DF13563	5220AF13561	5227DGT00561	5227NC00560	5227SLT00560	5220LL00560	5220NG00563	5220NG00562	UY128GAS # 11
				5222DG0003									
3	6.4	5222TP13644	5227PFT00641	5220FD00643	5220DF13643	5220AF13561		5227NC00640					
				5222DG0004									

CTU9013-2-□□□M

針數 Needle	針距 m.m	Throat plate 針鈑	Presser foot asm 壓腳	Main feed dog 主送布齒	Diff feed dog 副送布齒	Aux feed dog 輔助送布齒	Top feed dog 上送布齒	Needle clamp 針留	Upper looper 上結線鉤	Lower looper 下結線鉤	Needle guide 前導針	Needle guide 後導針	Needle 針
3	5.6	5222TP13562	5227PFT00561	5220FD00563	5220DF13563	5220AF13560	5227DGT00561	5227NC00560	5227SLT00560	5220LL00560	5220NG00563	5220NG00562	UY128GAS # 11
				5222DG0001									
3	6.4	5222TP13642	5227PFT00641	5220FD00643	5220DF13643	5220AF13640		5227NC00640					
				5222DG0002									

CTU9060/CTU9200 GAUGE PARTS LIST

CTU9060-0-4 □□M

Main Parts 更換零件 / 針數 Needle	針距 m.m	Throat plate 針鈑	Presser foot asm 壓腳	Main feed dog 主送布齒	Diff feed dog 副送布齒	Top feed dog 上送布齒	Needle clamp 針留	Upper looper 上結線鉤	Lower looper 下結線鉤	Needle guide 前導針	Needle guide 後導針	Needle 針
4	6.0	5227TP60600	5227PFT60600	5220FD00643	5220DF00640	5227DGT00560	5228NC60601	5227SLT00560	5220LL60560	5220NG60560	5220NG00562	MY1014B # 11
				5220DG0017								

CTU9200-0-0□□□H
CTU9200-0-□□□H

Main Parts 更換零件 / 針數 Needle	針距 m.m	Throat plate 針鈑	Presser foot asm 壓腳	Main feed dog 主送布齒	Diff feed dog 副送布齒	Top feed dog 上送布齒	Needle clamp 針留	Upper looper 上結線鉤	Lower looper 下結線鉤	Needle guide 前導針	Needle guide 後導針	Needle 針
3	5.6	5220TP00567	5227PFT00562	5220FD00565	5220DF00561	5227DGT00560	5227NC00560	5227SLT00560	5220LL00560	5220NG00563	5220NG00562	UY128GAS # 14
				5220DG0024								
3	6.4	5220TP00645	5227PFT00642	5220FD00565	5220DF00561		5227NC00640					
				5220DG0024								

CTU9311 GAUGE PARTS LIST

CTU9311-0-0□□□M
CTU9311-0-□□□M

針數 Needle	針距 m.m	Throat plate 針板	Presser foot asm 壓腳	Main feed dog 主送布齒	Diff feed dog 副送布齒	Top feed dog 上送布齒	Needle clamp 針留	Upper looper 上結線鉤	Lower looper 下結線鉤	Needle guide 前導針	Needle guide 後導針	Needle 針
2	4.0	5227TPL1400	5227PFTL1401	5220FDL1561 / 5220DFL1561 組件5220DG0012		5227DGTL1560	5220NC00400	5227SLT00560	5220LL00560	5220NG00563	5220NG00562	UY128GAS # 11
2	4.8	5227TPL1480	5227PFTL1481				5220NC00480					
3	4.8	5227TPL1481	5227PFTL1481				5220NC00485					
3	5.6	5227TPL1560	5227PFTL1561				5227NC00560					
3	6.4	5227TPL1640	5227PFTL1641				5227NC00640					

CTU9311-0-0□□□L
CTU9311-0-□□□L

針數 Needle	針距 m.m	Throat plate 針板	Presser foot asm 壓腳	Main feed dog 主送布齒	Diff feed dog 副送布齒	Top feed dog 上送布齒	Needle clamp 針留	Upper looper 上結線鉤	Lower looper 下結線鉤	Needle guide 前導針	Needle guide 後導針	Needle 針
3	5.6	5227TPL1560	5227PFTL1561	5227FDL1562 / 5227DFL1562 組件5227DG0009		5227DGTL1560	5227NC00560	5227SLT00560	5220LL00560	5220NG00563	5220NG00562	UY128GAS # 11

CTU9311 GAUGE PARTS LIST

CTU9311-0-0 □□□S
CTU9311-0- □□□S

針數 Needle	針距 m.m	Throat plate 針鈑	Stitch plate Tongue 針鈑舌	Presser foot asm 壓腳	Main feed dog 主送布齒	Diff feed dog 副送布齒	Top feed dog 上送布齒	Needle clamp 針留	Upper looper 上結線鉤	Lower looper 下結線鉤	Needle guide 前導針	Needle guide 後導針	Needle 針
2	4.0	5222TPL156B / 5222TPL140A / 5222TPL1402		5227PFTL1401	5222FDL1560 / 5222DFL1560 組件 5222DG0009		5227DGTL1560	5220NC00400	5227SLT00560	5220LL00560	5220NG00563	5220NG00562	UY128GAS # 11
3	4.8	5222TPL156B / 5222TPL148A / 5222TPL1482		5227PFTL1481				5220NC00485					
3	5.6	5222TPL156B / 5222TPL156A / 5222TPL1562		5227PFTL1561				5227NC00560					
3	6.4	5222TPL156B / 5222TPL164A / 5222TPL1642		5227PFTL1641				5227NC00640					

CTU9311-0-0 □□□S1
CTU9311-0- □□□S1

針數 Needle	針距 m.m	Throat plate 針鈑	Stitch plate Tongue 針鈑舌	Presser foot asm 壓腳	Main feed dog 主送布齒	Diff feed dog 副送布齒	Top feed dog 上送布齒	Needle clamp 針留	Upper looper 上結線鉤	Lower looper 下結線鉤	Needle guide 前導針	Needle guide 後導針	Needle 針
2	4.0	5227TPL156B / 5222TPL140C / 5227TPL1402		5227PFTL1401	5222FDL1560 / 5222DFL1560 組件 5222DG0009		5227DGTL1560	5220NC00400	5227SLT00560	5220LL00560	5220NG00563	5220NG00562	UY128GAS # 11
3	4.8	5227TPL156B / 5222TPL148C / 5227TPL1482		5227PFTL1481				5220NC00485					
3	5.6	5227TPL156B / 5222TPL156C / 5227TPL1562		5227PFTL1561				5227NC00560					
3	6.4	5227TPL156B / 5222TPL164C / 5227TPL1642		5227PFTL1641				5227NC00640					

CTU9311 GAUGE PARTS LIST

CTU9311-0-0□□□S2
CTU9311-0-□□□S2

針數 Needle	針距 m.m	Throat plate 針板	Presser foot asm 壓腳	Main feed dog 主送布齒	Diff feed dog 副送布齒	Top feed dog 上送布齒	Needle clamp 針留	Upper looper 上結線鉤	Lower looper 下結線鉤	Needle guide 前導針	Needle guide 後導針	Needle 針
3	5.6	5227TPL1561	5227PFTL1561	5222FDL1561	5222DFL1561	5227DGTL1560	5227NC00560	5227SLT00560	5220LL00560	5220NG00563	5220NG00562	UY128GAS # 11
3	6.4	5227TPL1641	5227PFTL1641	5222DG0011			5227NC00640					

CTU9311-0-0□□□H
CTU9311-0-□□□H

針數 Needle	針距 m.m	Throat plate 針板	Presser foot asm 壓腳	Main feed dog 主送布齒	Diff feed dog 副送布齒	Top feed dog 上送布齒	Needle clamp 針留	Upper looper 上結線鉤	Lower looper 下結線鉤	Needle guide 前導針	Needle guide 後導針	Needle 針
2	4.0	5227TPL1400	5227PFTL1401	5227FDL1561 / 5220DFL1561 組件5227DG0004		5227DGTL1560	5220NC00400	5227SLT00560	5220LL00560	5220NG00563	5220NG00562	UY128GAS # 11
2	4.8	5227TPL1480	5227PFTL1481				5220NC00480					
3	4.8	5227TPL1481	5227PFTL1481				5220NC00480					
3	5.6	5227TPL1560	5227PFTL1561				5227NC00560					
3	6.4	5227TPL1640	5227PFTL1641				5227NC00640					

NTD7701
4-Needle, 6-Thread Flat-Seamer,
Feed-Off-The-Arm Machine

MT4512P-050 / PMD / FR01
12-Needle Double Chain Stitch Machine
(Lower Feed Metering Device 、Elastic hemmer)

UHU9304/TR025
Automatic chain cutter device direct-drive
cylinder bed top feed overlock fitted with
labor-saving rib folder

CXM2085-0-356M
Attaching Pre-Closed Flat Knit Elastic Band
Onto Waists Of Tubular Goods
(With Right Knife, Rear Puller & Chips Suction Pipe)

精機機械廠股份有限公司
CHING CHI MACHINE CO., LTD.

The specification and / or appearences of the equipment described
in this catalogue are subject to be changed without prior notice.
本目錄所述產品，因更新或改良，可能不事前預告，而對產品之外觀、規格、內容有所修改，特此聲明敬告請鑒亮。